SPRUCE STREET - PARROTT STREET IMPROVEMENTS

CITY OF ROSEBURG, DOUGLAS COUNTY, OREGON

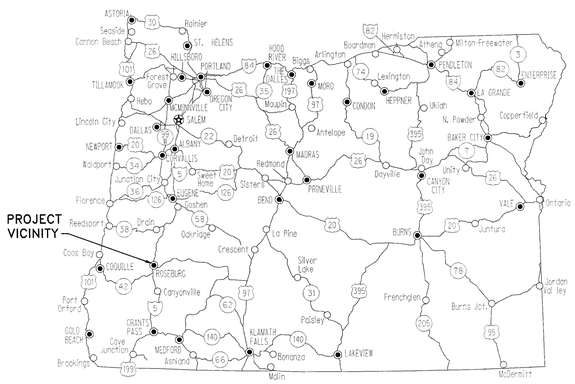

VICINITY MAP
NTS

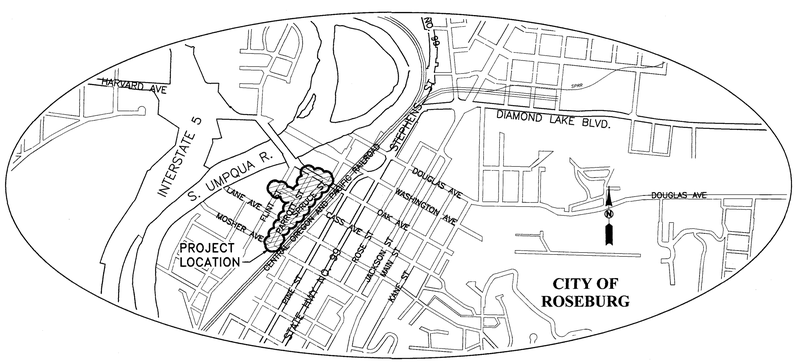

LOCATION MAP
NTS

CITY OF ROSEBURG
PROJECT NUMBER
15UR03

SHEET INDEX

C.1	COVER SHEET
C.2	OVERALL
C.3	TYPICAL ROAD SECTIONS SHEET
C.4	SHEET INDEX
C.5	SPRUCE STREET PLAN & PROFILE
C.6	SPRUCE STREET UTILITIES PLAN & PROFILE
C.7	SPRUCE STREET PLAN & PROFILE
C.8	SPRUCE STREET UTILITIES PLAN & PROFILE
C.9	PARROTT STREET PLAN & PROFILE
C.10	CASS & LANE AVENUE PLAN & PROFILE
C.11	SPRUCE ST. DRIVEWAY APPROACH PROFILES
C.12	STRIPING & SIGNAGE PLAN
EC.1	EROSION CONTROL DEMOLITION PLAN
EC.2	EROSION CONTROL DEMOLITION PLAN
EC.3	EROSION CONTROL DETAILS
TC.1	TRAFFIC CONTROL PLAN (STAGE 1)
TC.2	TRAFFIC CONTROL PLAN (STAGE 2)
TC.3	TRAFFIC CONTROL PLAN (STAGE 3)
TC.4	TRAFFIC CONTROL DETAILS
SD.1	STANDARD DETAILS
SD.2	STANDARD DETAILS
SD.3	STORM SEWER STANDARD DETAILS
SD.4	WATER STANDARD DETAILS
SD.5	SANITARY SEWER STANDARD DETAILS
SD.6	SANITARY SEWER STANDARD DETAILS

VERTICAL DATUM:

THE BENCHMARK FOR THIS PROJECT IS AN OREGON DEPARTMENT OF TRANSPORTATION BRASS PLUG LOCATED IN THE SIDEWALK ALONG THE SOUTH SIDE OF OAK AVE. APPROXIMATELY 115' EAST OF THE CENTERLINE OF SE PARROTT ST. - ELEV. = 456.34 (NAVD 88). IN THE CASE OF THE PROJECT BENCHMARK BEING DAMAGED OR DESTROYED DURING THE CONSTRUCTION PROCESS, DOUGLAS COUNTY BENCHMARK 40-8, ELEVATION 456.47 (NAVD 88) MAY BE USED FOR ALL CONSTRUCTION APPLICATIONS.

HORIZONTAL DATUM:

THE HORIZONTAL CONTROL FOR THIS PROJECT WAS ESTABLISHED PER OREGON DEPARTMENT OF TRANSPORTATION OREGON COORDINATE REFERENCE SYSTEM -COTTAGE GROVE-CANYONVILLE ZONE.

ASBESTOS SPECIAL NOTE:

MATERIALS CONTAINING ASBESTOS MAY BE PRESENT IN UNDERGROUND PIPE SYSTEMS. ALL APPROPRIATE FEDERAL, STATE, COUNTY AND MUNICIPAL RULES, REGULATIONS AND GUIDELINES MUST BE FOLLOWED WHEN WORKING WITH ASBESTOS-CONTAINING MATERIAL. NONFRIABLE MATERIAL MUST BE HANDLED, TRANSPORTED AND DISPOSED OF IN A WAY THAT PREVENTS IT FROM BECOMING FRIABLE AND RELEASING ASBESTOS FIBERS. IF AC PIPE IS SHATTERED, DAMAGED OR BADLY WEATHERED, IT IS CONSIDERED TO BE FRIABLE AND WILL LIKELY RELEASE ASBESTOS FIBERS. DEQ LICENSED ASBESTOS ABATEMENT CONTRACTOR USING DEQ CERTIFIED WORKERS MUST REMOVE ALL FRIABLE ASBESTOS MATERIAL. ANY AND ALL PERMITS AND FEES THAT ARE REQUIRED BY THE DEQ, DOUGLAS, COUNTY AND ANY OTHER REGULATORY AGENCY MUST BE OBTAINED BY THE CONTRACTOR PRIOR TO DISPOSING OF THE ASBESTOS CONTAINING MATERIAL. FOR INFORMATION ABOUT ASBESTOS RULES, CONTACT THE DEQ WESTERN REGION OFFICE IN MEDFORD, OREGON.

SPECIAL PROJECT NOTES:

1. CONTRACTOR SHALL BE RESPONSIBLE FOR THE INSTALLATION OF TWO (2) WEEP HOLES TO FROM THE BACK OF WALK TO THE NEW CONCRETE CURB FOR EACH PROPERTY PER DETAIL PW-007 ON SHEET SD.1 AT NO ADDITIONAL COST TO THE CITY. EXACT LOCATION OF WEEP HOLES SHALL BE DETERMINED IN THE FIELD PRIOR TO INSTALLATION.

GEOTECHNICAL NOTES:

1. THE "GEOTECHNICAL DESIGN REPORT SPRUCE & PARROTT STREETS ROSEBURG, OREGON" PREPARED BY THE GALLI GROUP, DATED NOVEMBER 11, 2015, AND ANY SUBSEQUENT UPDATES, SHALL BE CONSIDERED PART OF THESE PLANS AND REFERENCED FOR ALL SITE CONSTRUCTION.
2. EXCAVATION, GRADING, TESTING AND EMBANKMENT PLACEMENT SHALL BE COMPLETED AS PER RECOMMENDATIONS OF THE REPORT.
3. ALL SITE CLEARING AND GRUBBING OF TOPSOIL/ORGANIC MATERIAL SHALL BE PER THE RECOMMENDATIONS OF THE GEOTECHNICAL REPORT.

CITY PUBLIC WORKS INSPECTION SCHEDULE:

CITY OF ROSEBURG SHALL BE NOTIFIED FOR INSPECTION AT LEAST 24 HOURS PRIOR TO THE ACCOMPLISHMENT OF THE FOLLOWING STAGES OF CONSTRUCTION. PHONE: 541-492-6730. FAX: 672-2785.

1. ANY STORM SEWER CONSTRUCTION (INCLUDING STRUCTURES)
2. FINISH SUB-GRADE. (PRIOR TO FABRIC INSTALLATION)
3. SOIL STABILIZATION FABRIC INSTALLATION
4. ANY CONCRETE WORK
5. FINISH BASE COURSE GRADE
6. TELEVISION INSPECTION OF STORM DRAINAGE (PRIOR TO FINAL PAVING)
7. PAVING

NONE OF THE ABOVE ITEMS OF WORK SHALL BE COVERED UNTIL INSPECTED BY THE CITY OF ROSEBURG PUBLIC WORKS.

CALL BEFORE YOU DIG !
ONE CALL: (800) 332-2344
OAR 952-001-0010 THROUGH
OAR 952-001-0090

ie engineering
www.ieengineering.com
(541) 673-0166

REGISTERED PROFESSIONAL ENGINEER
OREGON
JULY 13, 2004
ALEX M. PALM
EXPIRES: 12/31/2016

Rev.	Date	Dwg	Description

i.e. ENGINEERING
809 SE Pine Street
Roseburg, Oregon 97470
PHONE (541) 673-0166
FAX (541) 440-9392
iemail@ieengineering.com

Project Name:
SPRUCE ST. - PARROTT ST. IMPROVEMENTS

Title:
COVER SHEET

DES	AMP	PROJECT NO.	149-189
DWG	LAUB	DATE:	NOVEMBER 13, 2015
CHK	AMP	SCALE:	NONE
APP	AMP	SHEET:	C.1

DO NOT DUPLICATE

Z:\JOBS\0149-City of Roseburg\149-189 Spruce-Parrott Improvements\CADD\CONSTRUCTION\149-189_C-SETAS.dwg
Apr 11, 2016 JohnL

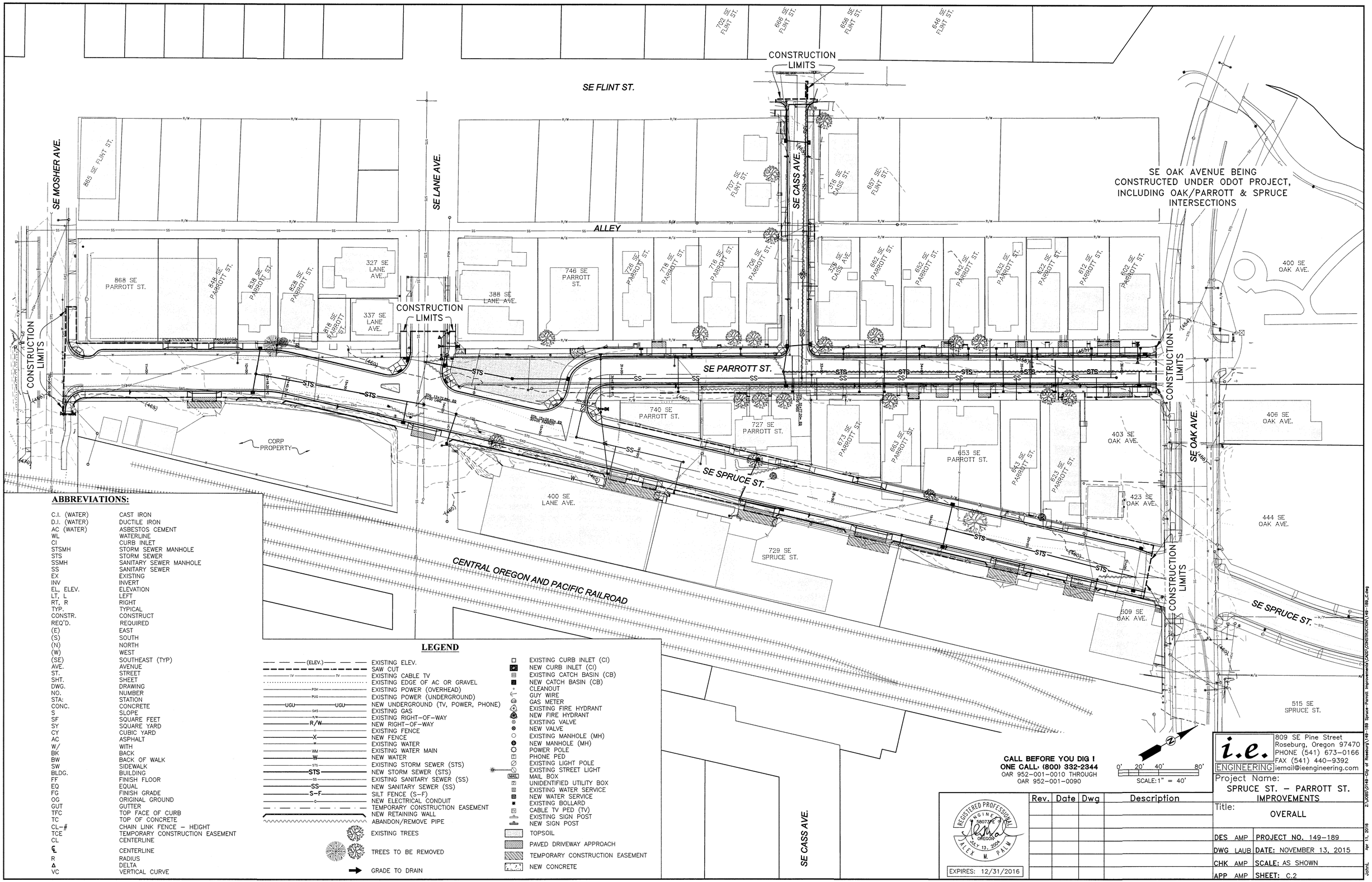

ABBREVIATIONS:

C.I. (WATER)	CAST IRON
D.I. (WATER)	DUCTILE IRON
AC (WATER)	ASBESTOS CEMENT
WL	WATERLINE
CI	CURB INLET
STSMH	STORM SEWER MANHOLE
STS	STORM SEWER
SSMH	SANITARY SEWER MANHOLE
SS	SANITARY SEWER
EX	EXISTING
INV	INVERT
EL, ELEV.	ELEVATION
LT, L	LEFT
RT, R	RIGHT
TYP.	TYPICAL
CONSTR.	CONSTRUCT
REQ'D.	REQUIRED
(E)	EAST
(S)	SOUTH
(N)	NORTH
(W)	WEST
(SE)	SOUTHEAST (TYP)
AVE.	AVENUE
ST.	STREET
SHT.	SHEET
DWG.	DRAWING
NO.	NUMBER
STA:	STATION
CONC.	CONCRETE
S	SLOPE
SF	SQUARE FEET
SY	SQUARE YARD
CY	CUBIC YARD
AC	ASPHALT
W/	WITH
BK	BACK
BW	BACK OF WALK
SW	SIDEWALK
BLDG.	BUILDING
FF	FINISH FLOOR
EQ	EQUAL
FG	FINISH GRADE
OG	ORIGINAL GROUND
GUT	GUTTER
TFC	TOP FACE OF CURB
TC	TOP OF CONCRETE
CL-#	CHAIN LINK FENCE - HEIGHT
TCE	TEMPORARY CONSTRUCTION EASEMENT
CL	CENTERLINE
℄	CENTERLINE
R	RADIUS
Δ	DELTA
VC	VERTICAL CURVE

LEGEND

(ELEV.)	EXISTING ELEV.
	SAW CUT
TV	EXISTING CABLE TV
	EXISTING EDGE OF AC OR GRAVEL
POH	EXISTING POWER (OVERHEAD)
PUG	EXISTING POWER (UNDERGROUND)
UGU UGU	NEW UNDERGROUND (TV, POWER, PHONE)
GAS	EXISTING GAS
R/W	EXISTING RIGHT-OF-WAY
R/W	NEW RIGHT-OF-WAY
	EXISTING FENCE
X	NEW FENCE
W	EXISTING WATER
WM	EXISTING WATER MAIN
W	NEW WATER
STS	EXISTING STORM SEWER (STS)
STS	NEW STORM SEWER (STS)
SS	EXISTING SANITARY SEWER (SS)
SS	NEW SANITARY SEWER (SS)
S-F	SILT FENCE (S-F)
C	NEW ELECTRICAL CONDUIT
	TEMPORARY CONSTRUCTION EASEMENT
	NEW RETAINING WALL
	ABANDON/REMOVE PIPE
	EXISTING TREES
	TREES TO BE REMOVED
	GRADE TO DRAIN
	EXISTING CURB INLET (CI)
	NEW CURB INLET (CI)
	EXISTING CATCH BASIN (CB)
	NEW CATCH BASIN (CB)
	CLEANOUT
	GUY WIRE
	GAS METER
	EXISTING FIRE HYDRANT
	NEW FIRE HYDRANT
	EXISTING VALVE
	NEW VALVE
	EXISTING MANHOLE (MH)
	NEW MANHOLE (MH)
	POWER POLE
	PHONE PED
	EXISTING LIGHT POLE
	EXISTING STREET LIGHT
MAIL	MAIL BOX
	UNIDENTIFIED UTILITY BOX
	EXISTING WATER SERVICE
	NEW WATER SERVICE
	EXISTING BOLLARD
	CABLE TV PED (TV)
	SIGN SIGN POST
	NEW SIGN POST
	TOPSOIL
	PAVED DRIVEWAY APPROACH
	TEMPORARY CONSTRUCTION EASEMENT
	NEW CONCRETE

REGISTERED PROFESSIONAL ENGINEER
56073PE
OREGON
MAY 13, 2004
ALEX M. PALM
EXPIRES: 12/31/2016

Rev.	Date	Dwg	Description

i.e. ENGINEERING
809 SE Pine Street
Roseburg, Oregon 97470
PHONE (541) 673-0166
FAX (541) 440-9392
iemail@ieengineering.com

Project Name:
SPRUCE ST. - PARROTT ST. IMPROVEMENTS

Title:
OVERALL

DES AMP	PROJECT NO. 149-189
DWG LAUB	DATE: NOVEMBER 13, 2015
CHK AMP	SCALE: AS SHOWN
APP AMP	SHEET: C.2

DO NOT DUPLICATE

Z:\JOBS\149-City of Roseburg\149-189 Spruce-Parrott Improvements\CADD\CONSTRUCTION\149-189_C.dwg
Apr 11, 2016
JohnL

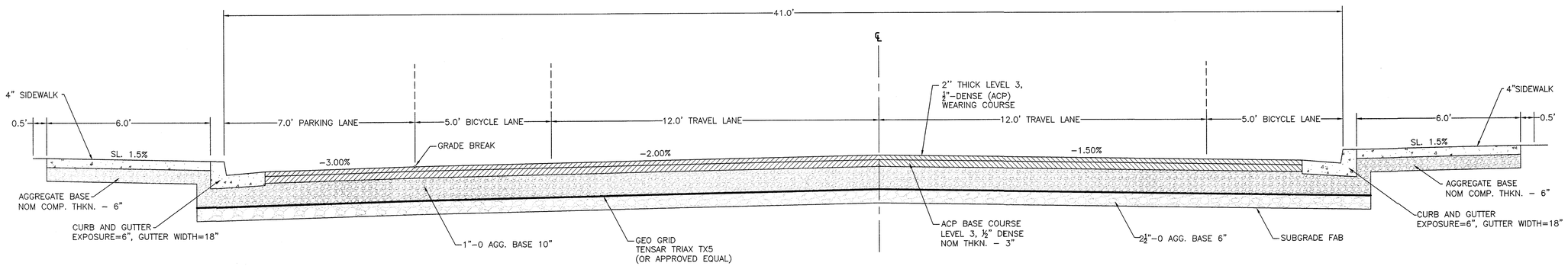

TYPICAL SPRUCE STREET SECTION
1" = 2'-0"

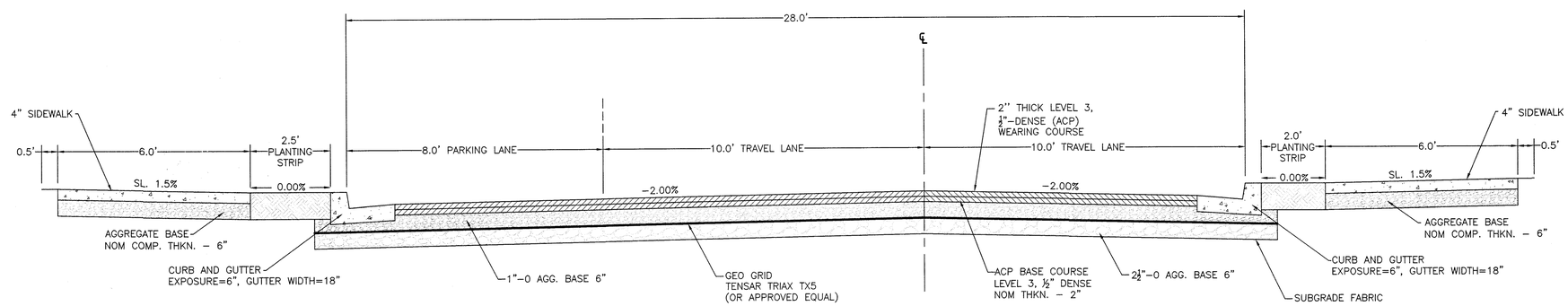

TYPICAL PARROTT STREET SECTION
1" = 2'-0"

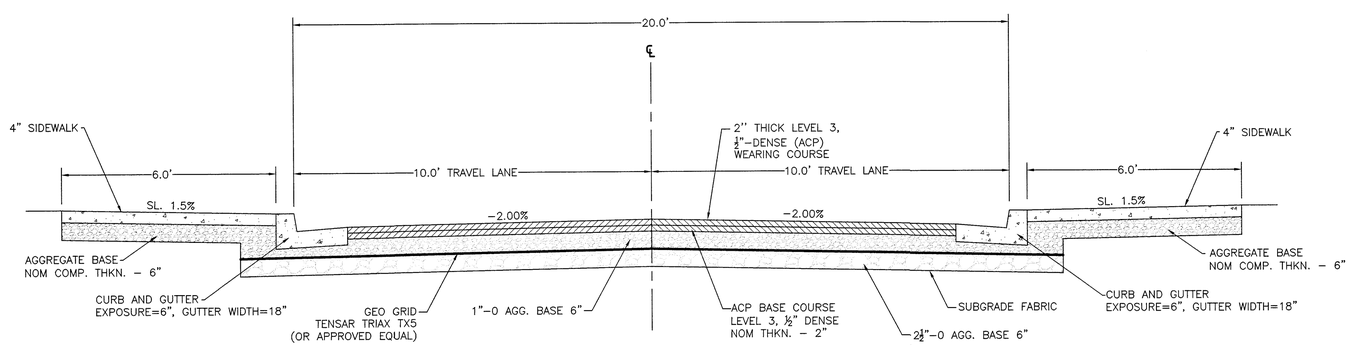

TYPICAL CASS AVENUE SECTION
1" = 2'-0"

REGISTERED PROFESSIONAL ENGINEER
86073PE
OREGON
JULY 13, 2004
ALEX M. PALM
EXPIRES: 12/31/2016

Rev.	Date	Dwg	Description

CALL BEFORE YOU DIG !
ONE CALL: (800) 332-2344
OAR 952-001-0010 THROUGH
OAR 952-001-0090

i.e. ENGINEERING
809 SE Pine Street
Roseburg, Oregon 97470
PHONE (541) 673-0166
FAX (541) 440-9392
iemail@ieengineering.com

Project Name:
SPRUCE ST. - PARROTT ST. IMPROVEMENTS

Title:
TYPICAL ROAD SECTIONS SHEET

DES	AMP	PROJECT NO. 149-189	
DWG	LAUB	DATE: NOVEMBER 13, 2015	
CHK	AMP	SCALE: AS SHOWN	
APP	AMP	SHEET: C.3	

DO NOT DUPLICATE

Z:\JOBS\0149-City of Roseburg\149-189 Spruce-Parrott Improvements\CADD\CONSTRUCTION\149-189_C.dwg
JohnL Apr 13, 2016

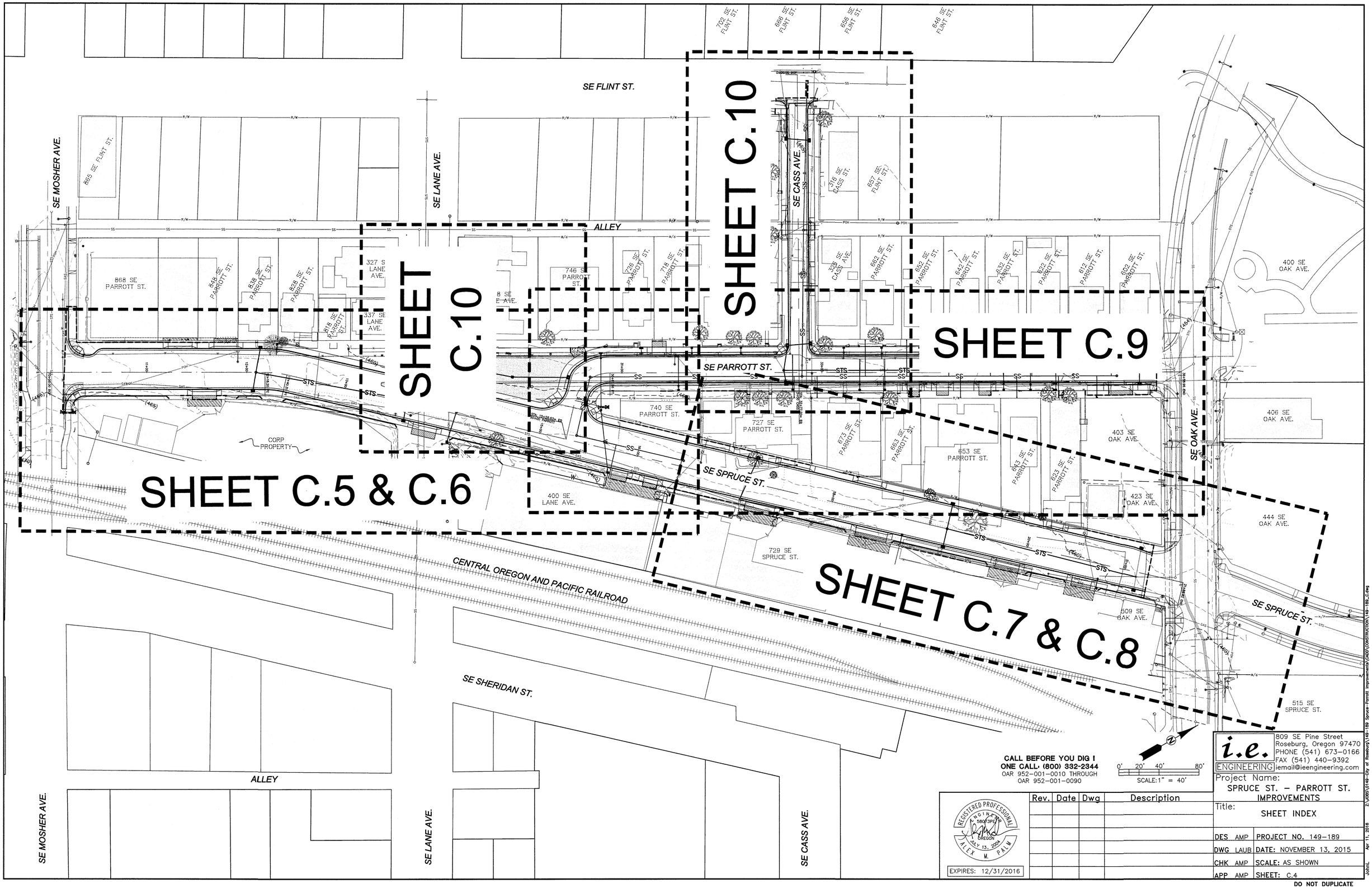

CALL BEFORE YOU DIG !
ONE CALL· (800) 332-2344
OAR 952-001-0010 THROUGH
OAR 952-001-0090

0' 20' 40' 80'
SCALE: 1" = 40'

REGISTERED PROFESSIONAL ENGINEER
ALEX M. PALM
OREGON
JULY 13, 2004
EXPIRES: 12/31/2016

Rev.	Date	Dwg	Description

i.e. ENGINEERING
809 SE Pine Street
Roseburg, Oregon 97470
PHONE (541) 673-0166
FAX (541) 440-9392
iemail@ieengineering.com

Project Name:
SPRUCE ST. – PARROTT ST. IMPROVEMENTS

Title:
SHEET INDEX

DES AMP	PROJECT NO. 149-189
DWG LAUB	DATE: NOVEMBER 13, 2015
CHK AMP	SCALE: AS SHOWN
APP AMP	SHEET: C.4

DO NOT DUPLICATE

Z:\JOBS\0149-City of Roseburg\149-189 Spruce-Parrott Improvements\CADD\CONSTRUCTION\149-189_C.dwg
Apr 11, 2016
JohnL

1. STA: 10+00 – 16+52
   CONSTRUCT CONC. CURB & GUTTER – 1280'
   CONSTRUCT MONOLITHIC 6' SW – 6,447 SF
   (SEE DETAIL ON SHT. SD.1)
2. CONSTRUCT CONC. DRIVEWAY APPROACH – 1,116 SF
   CONSTRUCT AC APRON TO MATCH
   (SEE DETAILS ON SHT. SD.1)
   SEE GENERAL NOTE 5 THIS SHEET.
3. CONSTRUCT SW RAMP (SEE DETAILS ON SHT. SD.1)
4. CONSTRUCT CONC. RETAINING WALL – 240 SF
   (SEE DETAILS ON SHT. SD.2)
5. CONSTRUCT CONC. RETAINING WALL – 28 SF
   (SEE DETAILS ON SHT. SD.2)
6. CONSTRUCT CONC. RETAINING WALL – 310 SF
   (SEE DETAILS ON SHT. SD.2)
7. CONSTRUCT CONC. RETAINING WALL – 559 SF
   (SEE DETAILS ON SHT. SD.2)
8. REMOVE EXISTING CURB, GUTTER, BOTH SIDES;
   ROAD SURFACING AND ANY BASE TO A DEPTH OF 6".
   LEAVE EXISTING WEST SIDE SW
   PLACE 6" OF TOPSOIL AND GRADE TO DRAIN – 85 CY
   (SEE LANDSCAPE NOTES THIS SHEET)
9. CONSTRUCT 3.0' TALL (WOOD) FENCE – 14 LF
   END NEW FENCE AT TERMINATION OF EXISTING FENCE
10. CONSTRUCT 3.0' TALL (WOOD) FENCE – 42 LF
11. MOVE EXISTING (CL–6) FENCE – 36 LF
12. REPLACE RAMP WITH CONCRETE – 12 SF
    (SEE CONCRETE RAMP DETAIL ON SHT. SD.2)

GENERAL NOTES:

1. CONTRACTOR SHALL PROVIDE AND INSTALL ALL FITTINGS AND APPURTENANCES AS NEEDED TO CONNECT ANY NEW UTILITIES TO EXISTING UTILITIES AT NO ADDITIONAL COST TO THE CITY.
2. PLEASE REFERENCE THE SIGNAGE AND STRIPING PLAN SHEET FOR ALL CONSTRUCTION NOTES REGARDING THE REMOVAL AND REPLACEMENT OF ALL STREET SIGNAGE AND NEW PAVEMENT MARKINGS.
3. PLEASE REFERENCE THE EROSION CONTROL DEMOLITION PLAN REGARDING ALL ITEMS TO BE REMOVED, INCLUDING TREES.
4. FOR ALL INFORMATION REGARDING EXISTING AND NEW FENCES, FENCE MATERIALS, AND ALL FENCING RELATED APPURTENANCES, PLEASE REFERENCE SPECIFICATION SECTION 01050 – FENCES – IN THE SPECIAL PROVISIONS OF THE CONTRACT SPECIFICATIONS.
5. PLEASE NOTE THAT SOME DRIVEWAYS WILL BE LOWERED DRIVEWAYS AND OTHERS WILL BE PARTIALLY LOWERED. ALL DRIVEWAYS REGARDLESS OF TYPE, WILL BE PAID AT THE SAME UNIT PRICE.

LANDSCAPE NOTES:

1. INSTALL A 6 INCH LAYER OF IMPORTED TOPSOIL CONTAINING NO SUBSTANCE DETRIMENTAL TO THE GROWTH OF PLANTS AND THAT IS FREE OF WEEDS. IMPORTED TOPSOIL TO COMPLY WITH ASTMD 5268, WITH PH RANGE OF 5.5 TO 7.0.
2. PRIOR TO PLACEMENT OF TOPSOIL, SCARIFY AND LOOSEN SUBGRADE OF PLANTING BED AREA TO A MINIMUM DEPTH OF 6 INCHES. REMOVE STONES LARGER THAN 1" IN ANY DIMENSION AND STICKS, ROOTS, WEEDS, RUBBISH AND OTHER EXTRANEOUS MATERIALS. SPREAD HALF OF THE TOPSOIL MIXTURE AND WORK INTO TOP OF LOOSENED SUBGRADE TO CREATE A TRANSITION LAYER. PLACE REMAINING HALF OF THE PLANTING SOIL MIXTURE TO THE DEPTH REQUIRED TO MEET THICKNESS.
3. SEED AREA WITH 'FLOWER MIX–MOW NO MORE' FROM TERRITORIAL SEED COMPANY IN COTTAGE GROVE OR APPROVED EQUAL. SEED PER MANUFACTURER'S SPECIFICATIONS AND RESEED AS NEEDED DURING THE FIRST TWO GROWING SEASONS TO ACHIEVE FULL, HEALTHY COVERAGE.

LEGEND:

- PAVED DRIVEWAY APPROACH
- TEMPORARY CONSTRUCTION EASEMENT (TCE)
- TOP SOIL
- NEW CONCRETE
- GRADE TO DRAIN
- APPROXIMATE SAWCUT LINE

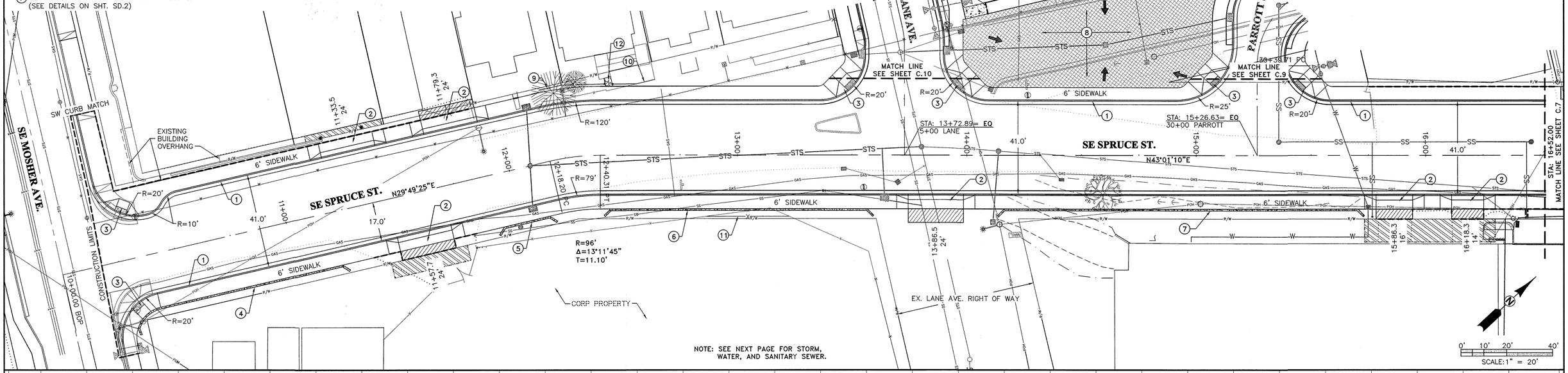

NOTE: SEE NEXT PAGE FOR STORM, WATER, AND SANITARY SEWER.

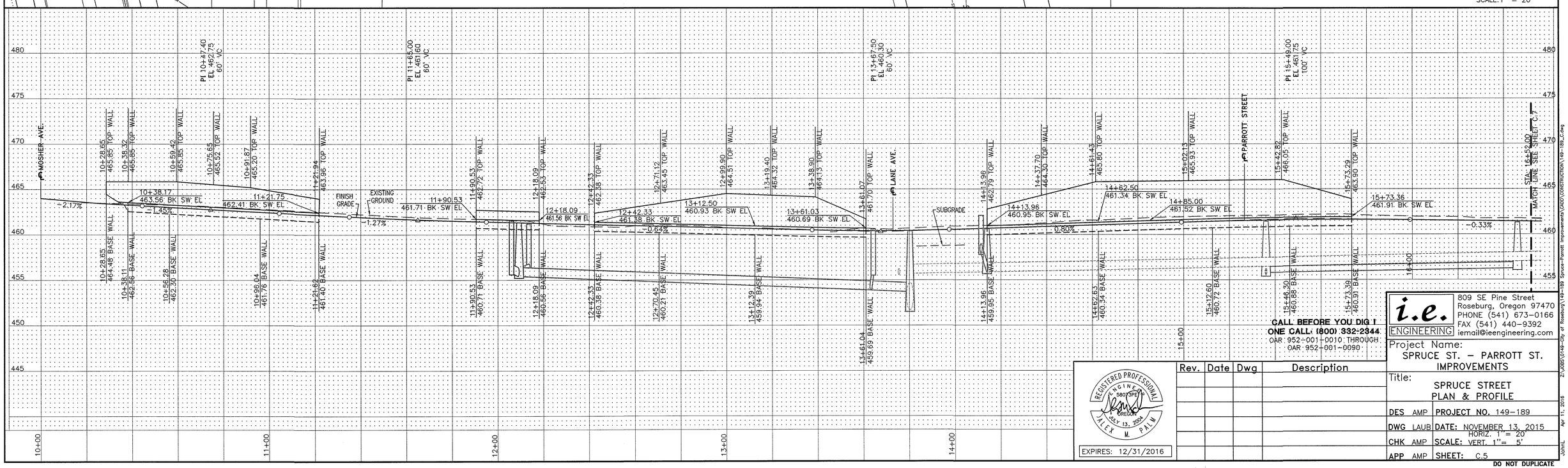

CALL BEFORE YOU DIG !
ONE CALL: (800) 332-2344
OAR: 952-001-0010 THROUGH
OAR: 952-001-0090

REGISTERED PROFESSIONAL ENGINEER 58073PE OREGON JULY 13, 2004 JALEX M. PALM
EXPIRES: 12/31/2016

Rev.	Date	Dwg	Description

i.e. ENGINEERING
809 SE Pine Street
Roseburg, Oregon 97470
PHONE (541) 673-0166
FAX (541) 440-9392
iemail@ieengineering.com

Project Name: SPRUCE ST. – PARROTT ST. IMPROVEMENTS

Title: SPRUCE STREET PLAN & PROFILE

DES AMP	PROJECT NO. 149-189
DWG LAUB	DATE: NOVEMBER 13, 2015
CHK AMP	SCALE: HORIZ. 1" = 20' VERT. 1" = 5'
APP AMP	SHEET: C.5

DO NOT DUPLICATE

Z:\JOBS\0149-City of Roseburg\149-189 Spruce-Parrott Improvements\CADD\CONSTRUCTION\149-189_C.dwg
Apr 11, 2016
JohnL

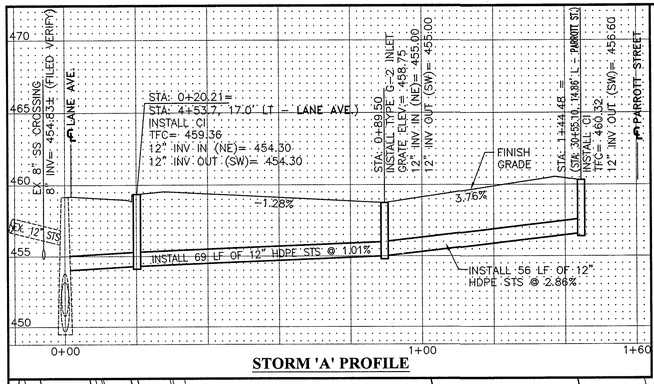

STORM 'A' PROFILE

1. STA: 12+09.30 CL
   CONSTRUCT 48" STSMH
   (SEE DETAILS ON SHT. SD.3)
   INSTALL 12-INCH STORM PIPE – 171'
2. STA: 12+06.00, 17' RT
   CONSTRUCT CURB INLET
   W/FLOGARD FGP-30CI
   (SEE DETAILS ON SHT. SD.3)
   INSTALL 12-INCH STORM PIPE – 18'
3. STA: 12+13.60, 24' LT
   CONSTRUCT CURB INLET
   W/FLOGARD FGP-30CI
   (SEE DETAILS ON SHT. SD.3)
   INSTALL 12-INCH STORM PIPE – 25'
4. STA: 13+64.20, 17' RT
   CONSTRUCT CURB INLET
   W/FLOGARD FGP-30CI
   (SEE DETAILS ON SHT. SD.3)
   INSTALL 12-INCH STORM PIPE – 21'
   INSTALL 12"x12" TEE
5. STA: 13+80.30, 3.7' LT
   CONSTRUCT 60" STSMH OVER EX STS PIPE
   (SEE DETAILS ON SHT. SD.3)
6. STA: 14+11.30, 29.0' RT
   CONSTRUCT TYPE G-2 INLET W/FLOGARD FILTER
   (SEE DETAILS ON SHT. SD.3)
   INSTALL 12-INCH STORM PIPE – 31'
7. STA: 16+46.00, 5.9' LT
   INSTALL NEW SSMH
   (SEE DETAILS ON SHT. SD.5)
8. STA: 15+36.00, 6.0' RT
   INSTALL NEW SSMH
   (SEE DETAILS ON SHT. SD.5)
9. SEE PARROTT ST. PLAN & PROFILE ON SHT. SD.9
10. INSTALL 12-INCH STORM PIPE – 56'
11. STA: 0+89.50
    CONSTRUCT TYPE G-2 INLET W/FLOGARD FILTER
    INSTALL 12-INCH STORM PIPE – 69'
    (SEE DETAILS ON SHT. SD.3)
12. STA: 12+28
    REMOVE & REPLACE WATER METER IN SW
    REPLACE SERVICE TO MAIN INCLUDING NEW SERVICE SADDLE AND SERVICE LINE
    (SEE METER INSTALLATION ASSEMBLY DETAIL ON SHT. SD.4)
13. WATER SERVICE
    PROTECT DURING CONSTRUCTION
    ADJUST BOX AS NEEDED
14. STA: 16+75
    FIELD VERIFY EXISTING BLDG. WATER SERVICE LOCATION PRIOR TO PLACEMENT. INSTALL METER BOX AND METER IN SW.
    (SEE METER INSTALLATION ASSEMBLY DETAIL ON SHT. SD.4)
15. INSTALL NEW HYDRANT AS SHOWN
    (SEE STANDARD DWG. NO. 105 ON SHT. SD.4)
16. REMOVE EXISTING HYDRANT (AND RELATED PIPE/FITTINGS) AND RETURN TO CITY.
    REMOVE EXISTING VALVE, INSTALL BLIND FLANGE.
17. INSTALL 8" SS PIPE, SLOPE PER PLANS.
18. INSTALL 4" SERVICE LATERAL (STUBOUT)
    (SEE DETAILS ON SHT. SD.6)
19. INSTALL 1" PE WATER SERVICE LINE FROM METER TO EXISTING BUILDING STUBOUT WITH PAK JOINT CONNECTIONS.
20. STA: 14+35.85, 1.85' L
    CONSTRUCT 48" STSMH OVER EX STS PIPE
    (SEE DETAILS ON SHT. SD.3)

LEGEND:

- PAVED DRIVEWAY APPROACH
- TEMPORARY CONSTRUCTION EASEMENT (TCE)
- TOP SOIL
- NEW CONCRETE
- ABANDON/REMOVE PIPE (SEE SEC 00490)
- APPROXIMATE SAWCUT LINE

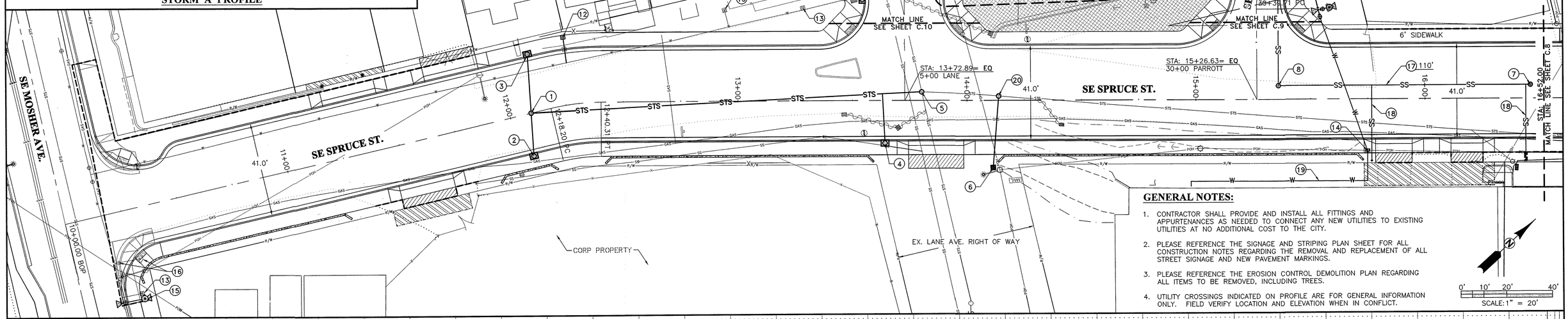

GENERAL NOTES:

1. CONTRACTOR SHALL PROVIDE AND INSTALL ALL FITTINGS AND APPURTENANCES AS NEEDED TO CONNECT ANY NEW UTILITIES TO EXISTING UTILITIES AT NO ADDITIONAL COST TO THE CITY.
2. PLEASE REFERENCE THE SIGNAGE AND STRIPING PLAN SHEET FOR ALL CONSTRUCTION NOTES REGARDING THE REMOVAL AND REPLACEMENT OF ALL STREET SIGNAGE AND NEW PAVEMENT MARKINGS.
3. PLEASE REFERENCE THE EROSION CONTROL DEMOLITION PLAN REGARDING ALL ITEMS TO BE REMOVED, INCLUDING TREES.
4. UTILITY CROSSINGS INDICATED ON PROFILE ARE FOR GENERAL INFORMATION ONLY. FIELD VERIFY LOCATION AND ELEVATION WHEN IN CONFLICT.

0' 10' 20' 40'
SCALE: 1" = 20'

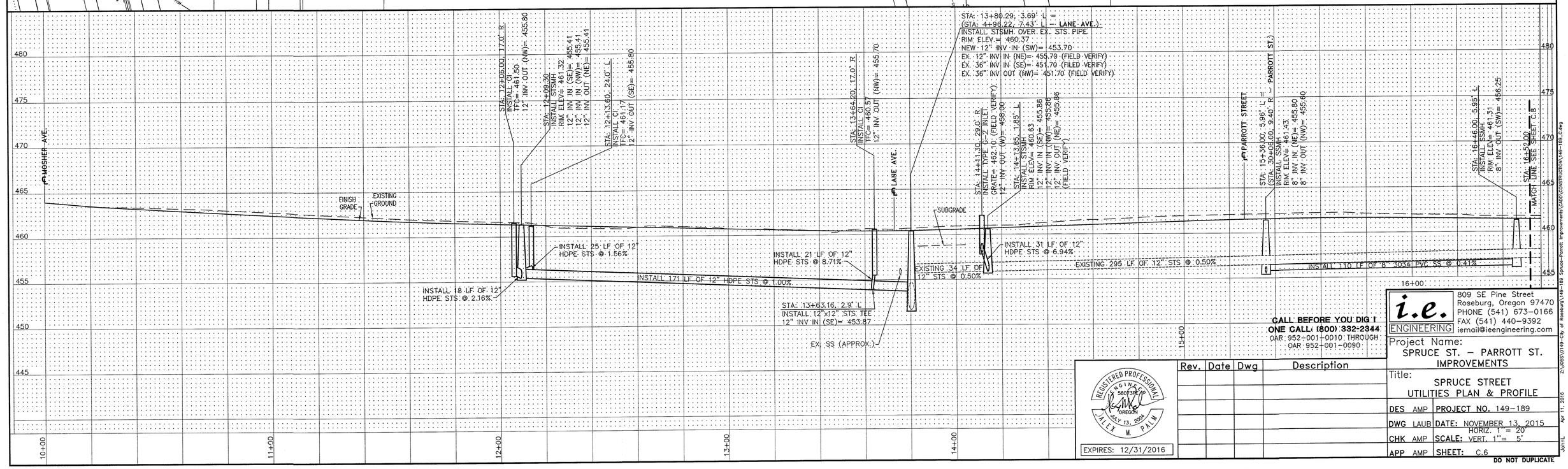

CALL BEFORE YOU DIG !
ONE CALL: (800) 332-2344
OAR: 952-001-0010 THROUGH
OAR: 952-001-0090

REGISTERED PROFESSIONAL ENGINEER
58073PE
OREGON
MAY 13, 2004
JALEX M. PALM
EXPIRES: 12/31/2016

Rev.	Date	Dwg	Description

i.e. ENGINEERING
809 SE Pine Street
Roseburg, Oregon 97470
PHONE (541) 673-0166
FAX (541) 440-9392
iemail@ieengineering.com

Project Name:
SPRUCE ST. – PARROTT ST. IMPROVEMENTS

Title:
SPRUCE STREET
UTILITIES PLAN & PROFILE

DES	AMP	PROJECT NO.	149-189
DWG	LAUB	DATE:	NOVEMBER 13, 2015
CHK	AMP	SCALE:	HORIZ. 1" = 20' VERT. 1" = 5'
APP	AMP	SHEET:	C.6

DO NOT DUPLICATE

Z:\0050\0149-City of Roseburg\149-189 Spruce-Parrott Improvements\CADD\CONSTRUCTION\149-189c_C.dwg
Apr 11, 2016
JOHN

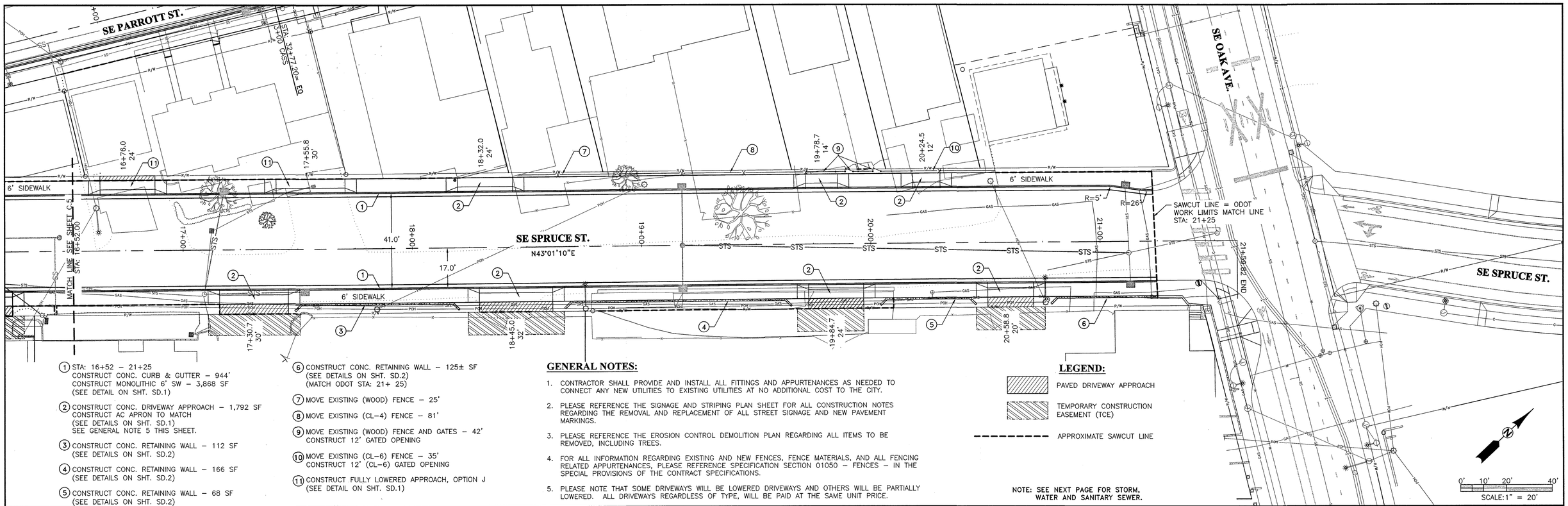

1. STA: 16+52 – 21+25
   CONSTRUCT CONC. CURB & GUTTER – 944'
   CONSTRUCT MONOLITHIC 6' SW – 3,868 SF
   (SEE DETAIL ON SHT. SD.1)
2. CONSTRUCT CONC. DRIVEWAY APPROACH – 1,792 SF
   CONSTRUCT AC APRON TO MATCH
   (SEE DETAILS ON SHT. SD.1)
   SEE GENERAL NOTE 5 THIS SHEET.
3. CONSTRUCT CONC. RETAINING WALL – 112 SF
   (SEE DETAILS ON SHT. SD.2)
4. CONSTRUCT CONC. RETAINING WALL – 166 SF
   (SEE DETAILS ON SHT. SD.2)
5. CONSTRUCT CONC. RETAINING WALL – 68 SF
   (SEE DETAILS ON SHT. SD.2)
6. CONSTRUCT CONC. RETAINING WALL – 125± SF
   (SEE DETAILS ON SHT. SD.2)
   (MATCH ODOT STA: 21+ 25)
7. MOVE EXISTING (WOOD) FENCE – 25'
8. MOVE EXISTING (CL–4) FENCE – 81'
9. MOVE EXISTING (WOOD) FENCE AND GATES – 42'
   CONSTRUCT 12' GATED OPENING
10. MOVE EXISTING (CL–6) FENCE – 35'
    CONSTRUCT 12' (CL–6) GATED OPENING
11. CONSTRUCT FULLY LOWERED APPROACH, OPTION J
    (SEE DETAIL ON SHT. SD.1)

GENERAL NOTES:

1. CONTRACTOR SHALL PROVIDE AND INSTALL ALL FITTINGS AND APPURTENANCES AS NEEDED TO CONNECT ANY NEW UTILITIES TO EXISTING UTILITIES AT NO ADDITIONAL COST TO THE CITY.
2. PLEASE REFERENCE THE SIGNAGE AND STRIPING PLAN SHEET FOR ALL CONSTRUCTION NOTES REGARDING THE REMOVAL AND REPLACEMENT OF ALL STREET SIGNAGE AND NEW PAVEMENT MARKINGS.
3. PLEASE REFERENCE THE EROSION CONTROL DEMOLITION PLAN REGARDING ALL ITEMS TO BE REMOVED, INCLUDING TREES.
4. FOR ALL INFORMATION REGARDING EXISTING AND NEW FENCES, FENCE MATERIALS, AND ALL FENCING RELATED APPURTENANCES, PLEASE REFERENCE SPECIFICATION SECTION 01050 – FENCES – IN THE SPECIAL PROVISIONS OF THE CONTRACT SPECIFICATIONS.
5. PLEASE NOTE THAT SOME DRIVEWAYS WILL BE LOWERED DRIVEWAYS AND OTHERS WILL BE PARTIALLY LOWERED. ALL DRIVEWAYS REGARDLESS OF TYPE, WILL BE PAID AT THE SAME UNIT PRICE.

LEGEND:

- PAVED DRIVEWAY APPROACH
- TEMPORARY CONSTRUCTION EASEMENT (TCE)
- APPROXIMATE SAWCUT LINE

NOTE: SEE NEXT PAGE FOR STORM, WATER AND SANITARY SEWER.

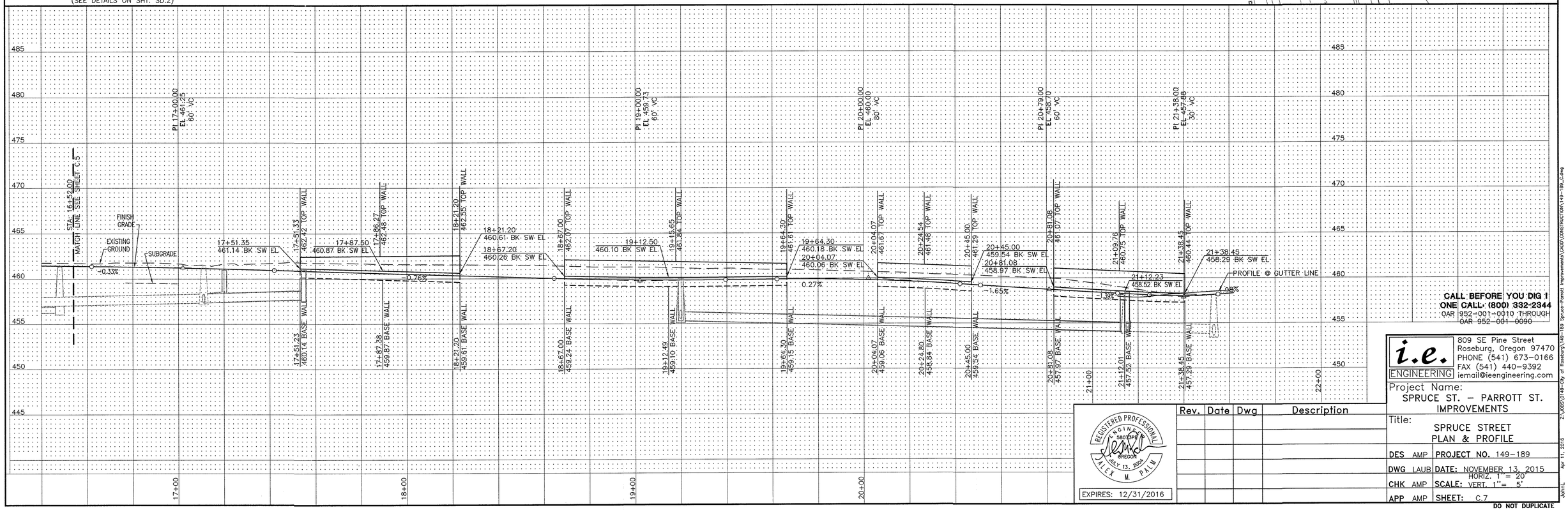

CALL BEFORE YOU DIG 1
ONE CALL: (800) 332-2344
OAR 952-001-0010 THROUGH
OAR 952-001-0090

REGISTERED PROFESSIONAL ENGINEER 58073PE OREGON JULY 13, 2004 ALEX M. PALM
EXPIRES: 12/31/2016

Rev.	Date	Dwg	Description

i.e. ENGINEERING
809 SE Pine Street
Roseburg, Oregon 97470
PHONE (541) 673-0166
FAX (541) 440-9392
iemail@ieengineering.com

Project Name:
SPRUCE ST. – PARROTT ST. IMPROVEMENTS

Title:
SPRUCE STREET PLAN & PROFILE

DES	AMP	PROJECT NO.	149-189
DWG	LAUB	DATE:	NOVEMBER 13, 2015
CHK	AMP	SCALE:	HORIZ. 1" = 20' VERT. 1" = 5'
APP	AMP	SHEET:	C.7

DO NOT DUPLICATE

Z:\JOBS\0149-City of Roseburg\149-189 Spruce-Parrott Improvements\CADD\CONSTRUCTION\149-189_C.dwg
Apr 11, 2016
JDYHL

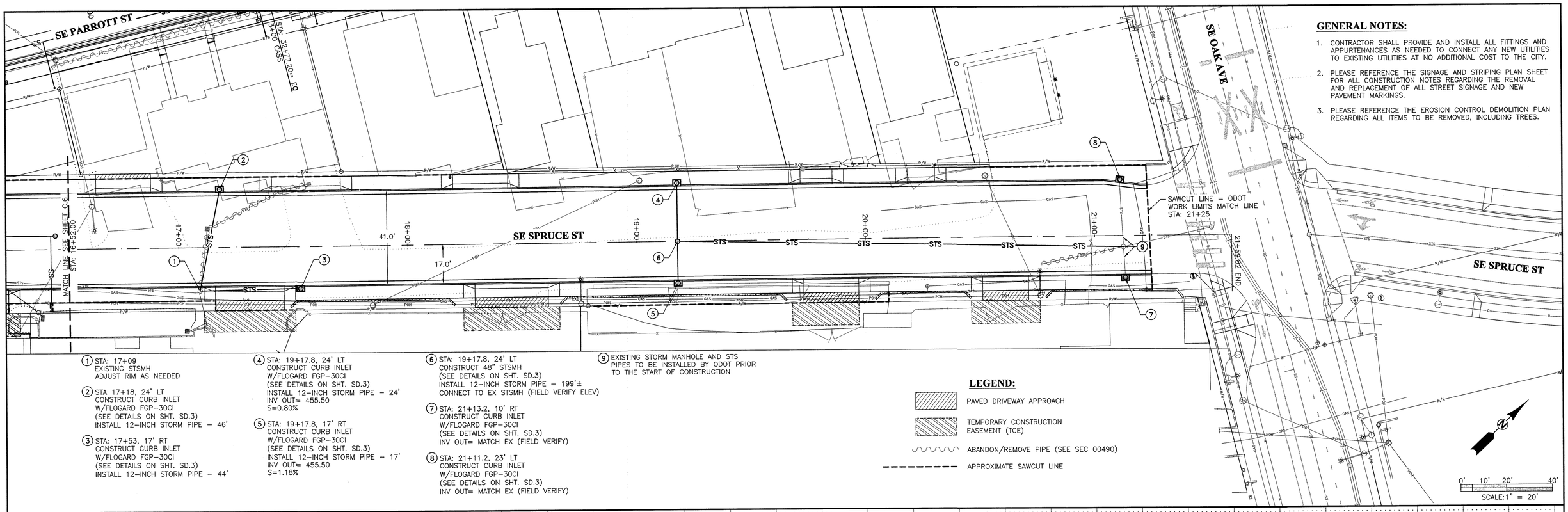

GENERAL NOTES:

1. CONTRACTOR SHALL PROVIDE AND INSTALL ALL FITTINGS AND APPURTENANCES AS NEEDED TO CONNECT ANY NEW UTILITIES TO EXISTING UTILITIES AT NO ADDITIONAL COST TO THE CITY.
2. PLEASE REFERENCE THE SIGNAGE AND STRIPING PLAN SHEET FOR ALL CONSTRUCTION NOTES REGARDING THE REMOVAL AND REPLACEMENT OF ALL STREET SIGNAGE AND NEW PAVEMENT MARKINGS.
3. PLEASE REFERENCE THE EROSION CONTROL DEMOLITION PLAN REGARDING ALL ITEMS TO BE REMOVED, INCLUDING TREES.

(1) STA: 17+09
EXISTING STSMH
ADJUST RIM AS NEEDED

(2) STA 17+18, 24' LT
CONSTRUCT CURB INLET
W/FLOGARD FGP-30CI
(SEE DETAILS ON SHT. SD.3)
INSTALL 12-INCH STORM PIPE - 46'

(3) STA: 17+53, 17' RT
CONSTRUCT CURB INLET
W/FLOGARD FGP-30CI
(SEE DETAILS ON SHT. SD.3)
INSTALL 12-INCH STORM PIPE - 44'

(4) STA: 19+17.8, 24' LT
CONSTRUCT CURB INLET
W/FLOGARD FGP-30CI
(SEE DETAILS ON SHT. SD.3)
INSTALL 12-INCH STORM PIPE - 24'
INV OUT= 455.50
S=0.80%

(5) STA: 19+17.8, 17' RT
CONSTRUCT CURB INLET
W/FLOGARD FGP-30CI
(SEE DETAILS ON SHT. SD.3)
INSTALL 12-INCH STORM PIPE - 17'
INV OUT= 455.50
S=1.18%

(6) STA: 19+17.8, 24' LT
CONSTRUCT 48" STSMH
(SEE DETAILS ON SHT. SD.3)
INSTALL 12-INCH STORM PIPE - 199'±
CONNECT TO EX STSMH (FIELD VERIFY ELEV)

(7) STA: 21+13.2, 10' RT
CONSTRUCT CURB INLET
W/FLOGARD FGP-30CI
(SEE DETAILS ON SHT. SD.3)
INV OUT= MATCH EX (FIELD VERIFY)

(8) STA: 21+11.2, 23' LT
CONSTRUCT CURB INLET
W/FLOGARD FGP-30CI
(SEE DETAILS ON SHT. SD.3)
INV OUT= MATCH EX (FIELD VERIFY)

(9) EXISTING STORM MANHOLE AND STS PIPES TO BE INSTALLED BY ODOT PRIOR TO THE START OF CONSTRUCTION

LEGEND:

- PAVED DRIVEWAY APPROACH
- TEMPORARY CONSTRUCTION EASEMENT (TCE)
- ABANDON/REMOVE PIPE (SEE SEC 00490)
- APPROXIMATE SAWCUT LINE

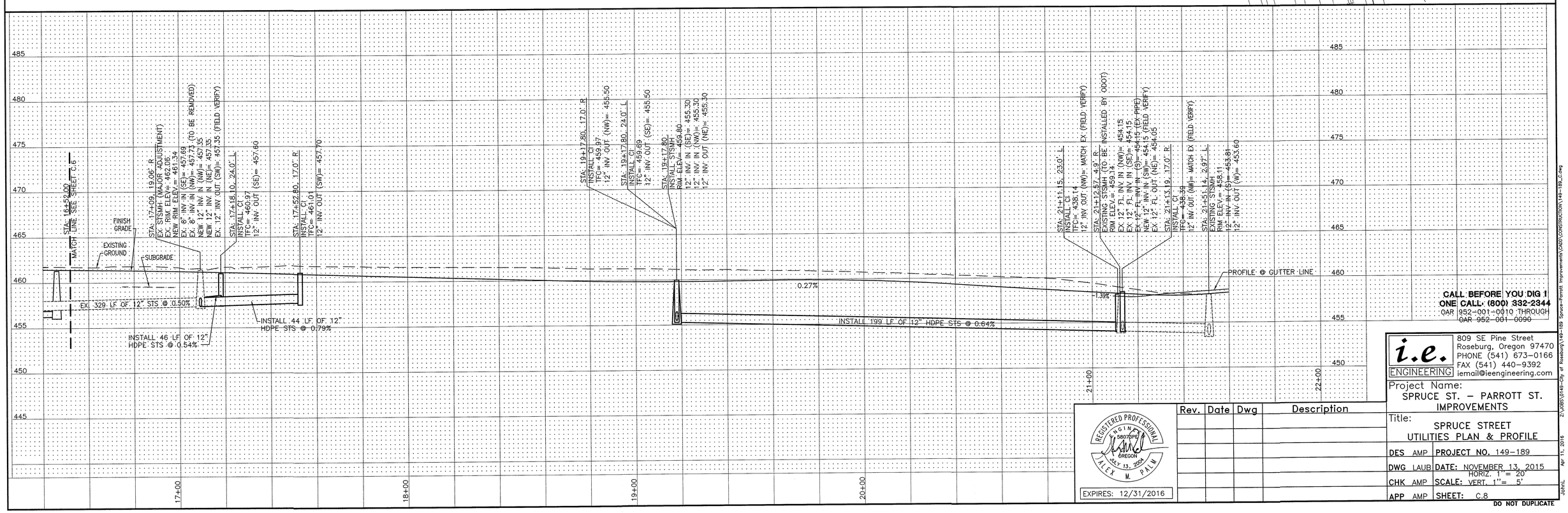

CALL BEFORE YOU DIG !
ONE CALL: (800) 332-2344
OAR 952-001-0010 THROUGH
OAR 952-001-0090

REGISTERED PROFESSIONAL ENGINEER
58070PE
OREGON
MAY 13, 2004
ALEX M. PALM
EXPIRES: 12/31/2016

Rev.	Date	Dwg	Description

i.e. ENGINEERING
809 SE Pine Street
Roseburg, Oregon 97470
PHONE (541) 673-0166
FAX (541) 440-9392
iemail@ieengineering.com

Project Name:
SPRUCE ST. - PARROTT ST. IMPROVEMENTS

Title:
SPRUCE STREET UTILITIES PLAN & PROFILE

DES	AMP	PROJECT NO.	149-189
DWG	LAUB	DATE:	NOVEMBER 13, 2015
CHK	AMP	SCALE:	HORIZ. 1" = 20' VERT. 1" = 5'
APP	AMP	SHEET:	C.8

DO NOT DUPLICATE

Z:\JOBS\0149-City of Roseburg\149-189 Spruce-Parrott Improvements\CADD\CONSTRUCTION\149-189_C.dwg
Apr 11, 2016 - 10:01AM

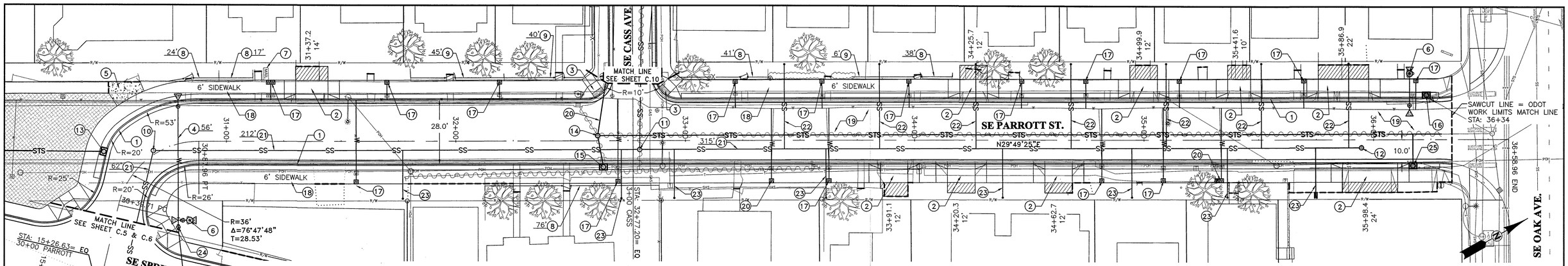

GENERAL NOTES:

1. CONTRACTOR SHALL PROVIDE AND INSTALL ALL FITTINGS AND APPURTENANCES AS NEEDED TO CONNECT ANY NEW UTILITIES TO EXISTING UTILITIES AT NO ADDITIONAL COST TO THE CITY.
2. PLEASE REFERENCE THE SIGNAGE AND STRIPING PLAN SHEET FOR ALL CONSTRUCTION NOTES REGARDING THE REMOVAL AND REPLACEMENT OF ALL STREET SIGNAGE AND NEW PAVEMENT MARKINGS.
3. PLEASE REFERENCE THE EROSION CONTROL DEMOLITION PLAN REGARDING ALL ITEMS TO BE REMOVED, INCLUDING TREES.
4. UTILITY CROSSINGS INDICATED ON PROFILE ARE FOR GENERAL INFORMATION ONLY. FIELD VERIFY LOCATION AND ELEVATION WHEN IN CONFLICT.
5. FOR ALL INFORMATION REGARDING EXISTING AND NEW FENCES, FENCE MATERIALS, AND ALL FENCING RELATED APPURTENANCES, PLEASE REFERENCE SPECIFICATION SECTION 01050 – FENCES – IN THE SPECIAL PROVISIONS OF THE CONTRACT SPECIFICATIONS.
6. PLEASE NOTE THAT SOME DRIVEWAYS WILL BE LOWERED DRIVEWAYS AND OTHERS WILL BE PARTIALLY LOWERED. ALL DRIVEWAYS REGARDLESS OF TYPE, WILL BE PAID AT THE SAME UNIT PRICE.

(1) CONSTRUCT CONC. CURB & GUTTER – 1280' (SEE DETAIL ON SHT. SD.1)

(2) CONSTRUCT CONC. DRIVEWAY APPROACH – 1,760 SF
CONSTRUCT AC APRON TO MATCH
(SEE DETAILS ON SHT. SD.1)
SEE GENERAL NOTE 6 THIS SHEET.

(3) CONSTRUCT SW RAMP (SEE DETAILS ON SHT. SD.1)

(4) INSTALL 12"x8" STAINLESS STEEL TAPPING SADDLE w/8" GATE VALVE (FLGxMJ) (SEE STANDARD DWG. NO. 103 ON SHT SD.4)
INSTALL 8–INCH D.I. WL

(5) CONSTRUCT CONC. SW AS SHOWN (MATCH TO EXISTING) – 107 SF

(6) INSTALL NEW HYDRANT AS SHOWN
(SEE STANDARD DWG. NO. 105 ON SHT. SD.4)

(7) ADJUST EX MAILBOX AS NEEDED

(8) REMOVE EXISTING (CL–4) FENCE
CONSTRUCT 3.0' TALL (CL–3) LENGTH PER PLAN

(9) CONSTRUCT 3.0' TALL (WOOD) FENCE

(10) STA: 30+67.97, 1.6' LT
INSTALL NEW SSMH
(SEE DETAILS ON SHT. SD.5)

(11) STA: 32+80.10, 3.8' RT
INSTALL NEW SSMH W/OUTSIDE DROP
(SEE DETAILS ON SHT. SD.5)

(12) STA: 35+94.70, 3.5' RT
INSTALL NEW SSMH
(SEE DETAILS ON SHT. SD.5)

(13) STA: 30+55.10, 14.9' LT
CONSTRUCT CURB INLET
W/FLOGARD FGP–90CI
(SEE DETAILS ON SHT. SD.3)

(14) STA: 32+61.86, 2.3' LT
REMOVE & REPLACE STSMH
(SEE TYPICAL STORM MANHOLE DETAIL ON SHT. SD.3)
INSTALL 12–INCH STORM PIPE – 369'±
CONNECT TO EX 12" STS STUB

(15) STA: 32+64.3, 10.0' RT
CONSTRUCT CURB INLET
W/FLOGARD FGP–30CI
(SEE DETAILS ON SHT. SD.3)
INSTALL 12–INCH STORM PIPE – 14'

(16) STA: 36+23.0, 18.0' LT
CONSTRUCT CURB INLET
W/FLOGARD FGP–30CI
(SEE DETAILS ON SHT. SD.3)
INSTALL 12–INCH STORM PIPE – 5'±
(CONNECT TO EX STORM PIPE)

(17) REMOVE & REPLACE WATER METER IN SW
REPLACE SERVICE TO MAIN INCLUDING NEW SERVICE SADDLE AND SERVICE LINE
(SEE METER INSTALLATION ASSEMBLY DETAIL ON SHT. SD.4)

(18) CONSTRUCT 6' CONC. SW – 6,116 SF
(SEE DETAIL ON SHEET SD.1)

(19) REMOVE EX 6–INCH CONC BASE – 1,008 SY
SE CASS AVE – SE OAK AVE(±)

(20) INSTALL 12–INCH STORM PIPE – 27'
S=2.08%

(21) INSTALL 8" SS PIPE, SLOPE PER PLANS.

(22) INSTALL 4" SERVICE LATERAL (STUBOUT)
(SEE DETAILS ON SHT. SD.6)

(23) INSTALL 4" SERVICE LATERAL
(SEE DETAILS ON SHT. SD.6)
(FIELD VERIFY LOCATION & ELEVATION)
CONNECT TO EXISTING LATERAL

(24) INSTALL 8" GATE VALVE & BLIND FLANGE w/2" TAP.
(SEE STANDARD DWG. NO. 103 ON SHT SD.4)

(25) STA: 36+17.17, 10.0' RT
CONSTRUCT CURB INLET
W/FLOGARD FGP–30CI
(SEE DETAILS ON SHT. SD.3)
INV OUT= 450.00
INSTALL 12–INCH STORM PIPE – 14'
S=11.57%
INSTALL 12"x12" TEE

LEGEND:

- PAVED DRIVEWAY APPROACH
- TOP SOIL
- NEW CONCRETE
- ABANDON/REMOVE PIPE (SEE SEC 00490)
- APPROXIMATE SAWCUT LINE

0' 10' 20' 40'
SCALE:1" = 20'

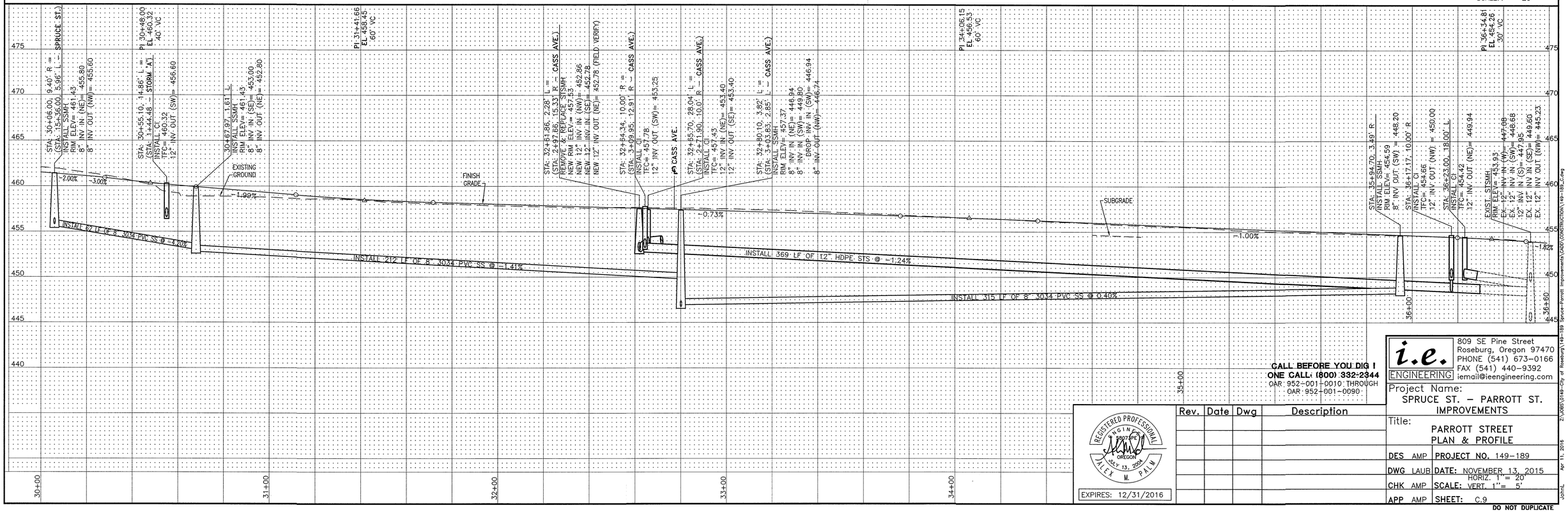

CALL BEFORE YOU DIG !
ONE CALL: (800) 332-2344
OAR: 952-001-0010 THROUGH
OAR: 952-001-0090

REGISTERED PROFESSIONAL ENGINEER OREGON JULY 13, 2004 ALEX M. PALM
EXPIRES: 12/31/2016

Rev.	Date	Dwg	Description

i.e. ENGINEERING
809 SE Pine Street
Roseburg, Oregon 97470
PHONE (541) 673–0166
FAX (541) 440–9392
iemail@ieengineering.com

Project Name:
SPRUCE ST. – PARROTT ST. IMPROVEMENTS

Title:
PARROTT STREET
PLAN & PROFILE

DES AMP	PROJECT NO. 149–189	
DWG LAUB	DATE: NOVEMBER 13, 2015	
CHK AMP	SCALE: HORIZ. 1"= 20' VERT. 1"= 5'	
APP AMP	SHEET: C.9	

DO NOT DUPLICATE

Z:\JOBS\0149-City of Roseburg\149-189 Spruce-Parrott Improvements\CADD\CONSTRUCTION\149-189_C.dwg
Apr 11, 2016 10:11PM

1. STA: 4+53.7, 17.0' LT = (STA: 0+20.21 – **STORM 'A'**) CONSTRUCT CURB INLET W/FLOGARD FGP–90CI (SEE DETAILS ON SHT. SD.3) INSTALL 12–INCH STORM SEWER PIPE – 20' CONNECT TO EX STSMH
2. STA: 4+55.4, 17.0' RT CONSTRUCT CURB INLET W/FLOGARD FGP–90CI OVER EXISTING PIPE (SEE DETAILS ON SHT. SD.3)
3. STA: 4+54.5, 1.8' RT ADJUST EX STSMH (MAJOR)
4. CONSTRUCT CONC. CURB & GUTTER – 113 LF (SEE DETAIL ON SHT. SD.1)
5. CONSTRUCT 6' CONC. SW – 595 SF (SEE DETAIL ON SHEET SD.1)
6. CONSTRUCT CONC. SW AS SHOWN (MATCH TO EXISTING) – 50 SF
7. INSTALL 8" D.I. WL – 47 LF (SEE WATER TIE–IN DETAIL 'A' ON SHT. SD.4)
8. REMOVE EXISTING HYDRANT AND RETURN TO CITY YARD ON DIAMOND LAKE BOULEVARD. REMOVE EXISTING VALVE.
9. INSTALL NEW HYDRANT AS SHOWN (SEE STANDARD DWG. NO. 105 ON SHT. SD.4)
10. REMOVE & RELOCATE EXISTING (WOOD) FENCE AS SHOWN – 16 LF
11. STA: 0+08, 9.8' LT (EX SSMH) SAWCUT EXISTING 12" SS LINE, CONNECT NEW 12" SS TO EXISTING 12" SS
12. STA: 1+56.2, 5.3' LT CONSTRUCT SSMH W/OUTSIDE DROP (SEE DETAILS ON SHT. SD.5) CONNECT EXISTING PIPES TO MH
13. STA: 0+25.7, 10.9' RT (EXISTING INLET) INSTALL 12–INCH STORM SEWER PIPE – 39'
14. STA: 0+64.9, 10.0' RT CONSTRUCT CURB INLET W/FLOGARD FGP–90CI (SEE DETAILS ON SHT. SD.3) INSTALL 12–INCH STORM SEWER PIPE – 23'
15. STA: 0+66.8, 10.0' LT CONSTRUCT CURB INLET W/FLOGARD FGP–90CI (SEE DETAILS ON SHT. SD.3)
16. STA: 2+70.6, 10.0' LT CONSTRUCT CURB INLET W/FLOGARD FGP–90CI (SEE DETAILS ON SHT. SD.3) INSTALL 12–INCH STORM SEWER PIPE – 23'
17. STA: 2+71.9, 10.0' RT CONSTRUCT CURB INLET W/FLOGARD FGP–90CI (SEE DETAILS ON SHT. SD.3) INSTALL 12–INCH STORM SEWER PIPE – 26'
18. CONSTRUCT CONC. CURB & GUTTER – 511 LF (SEE DETAIL ON SHEET SD.1)
19. CONSTRUCT 6' CONC. SW – 2,272 SF (SEE DETAIL ON SHEET SD.1) EXTRA FOR MONOLITHIC CONSTRUCT
20. CONSTRUCT CONCRETE DRIVEWAY APPROACH – 676 SF (SEE DETAILS ON SHT. SD.1) SEE GENERAL NOTE 6 THIS SHEET
21. CONSTRUCT ADA RAMP
22. CONSTRUCT 3.0' TALL (WOOD) FENCE
23. REMOVE EX SURFACES REPLACE IN KIND – 23 SY
24. SAW–CUT & MATCH EXISTING SW
25. INSTALL 8" SS PIPE, SLOPE PER PLANS.
26. INSTALL 12" SS PIPE, SLOPE PER PLANS.
27. INSTALL 4" SERVICE LATERAL (STUBOUT) (SEE DETAILS ON SHT. SD.6)
28. CONNECT 4" SERVICE LINES INTO ONE SERVICE LINE w/TEE & BENDS PRIOR TO OUTSIDE DROP ASSEMBLY.

LEGEND:

- TOP SOIL
- NEW CONCRETE
- ABANDON/REMOVE PIPE (SEE SEC 00490)
- APPROXIMATE SAWCUT LINE

GENERAL NOTES:

1. CONTRACTOR SHALL PROVIDE AND INSTALL ALL FITTINGS AND APPURTENANCES AS NEEDED TO CONNECT ANY NEW UTILITIES TO EXISTING UTILITIES AT NO ADDITIONAL COST TO THE CITY.
2. PLEASE REFERENCE THE SIGNAGE AND STRIPING PLAN SHEET FOR ALL CONSTRUCTION NOTES REGARDING THE REMOVAL AND REPLACEMENT OF ALL STREET SIGNAGE AND NEW PAVEMENT MARKINGS.
3. PLEASE REFERENCE THE EROSION CONTROL DEMOLITION PLAN REGARDING ALL ITEMS TO BE REMOVED, INCLUDING TREES.
4. UTILITY CROSSINGS INDICATED ON PROFILE ARE FOR GENERAL INFORMATION ONLY. FIELD VERIFY LOCATION AND ELEVATION WHEN IN CONFLICT.
5. FOR ALL INFORMATION REGARDING EXISTING AND NEW FENCES, FENCE MATERIALS, AND ALL FENCING RELATED APPURTENANCES, PLEASE REFERENCE SPECIFICATION SECTION 01050 – FENCES – IN THE SPECIAL PROVISIONS OF THE CONTRACT SPECIFICATIONS.
6. PLEASE NOTE THAT SOME DRIVEWAYS WILL BE LOWERED DRIVEWAYS AND OTHERS WILL BE PARTIALLY LOWERED. ALL DRIVEWAYS REGARDLESS OF TYPE, WILL BE PAID AT THE SAME UNIT PRICE.

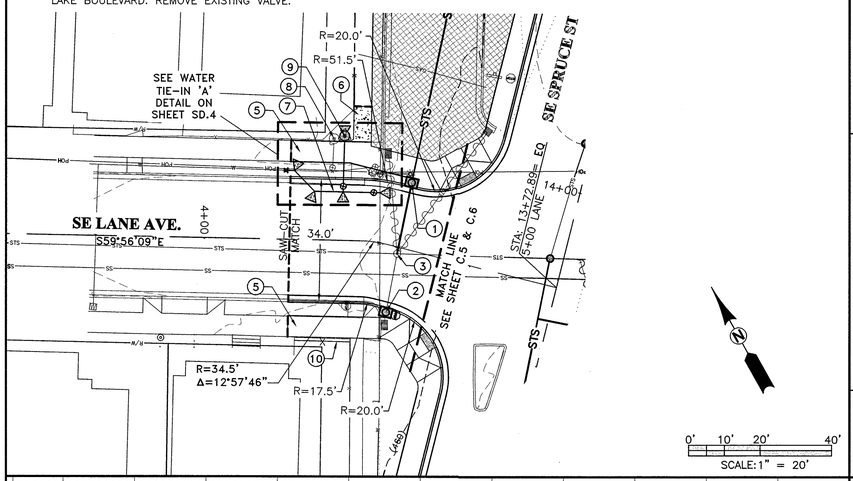

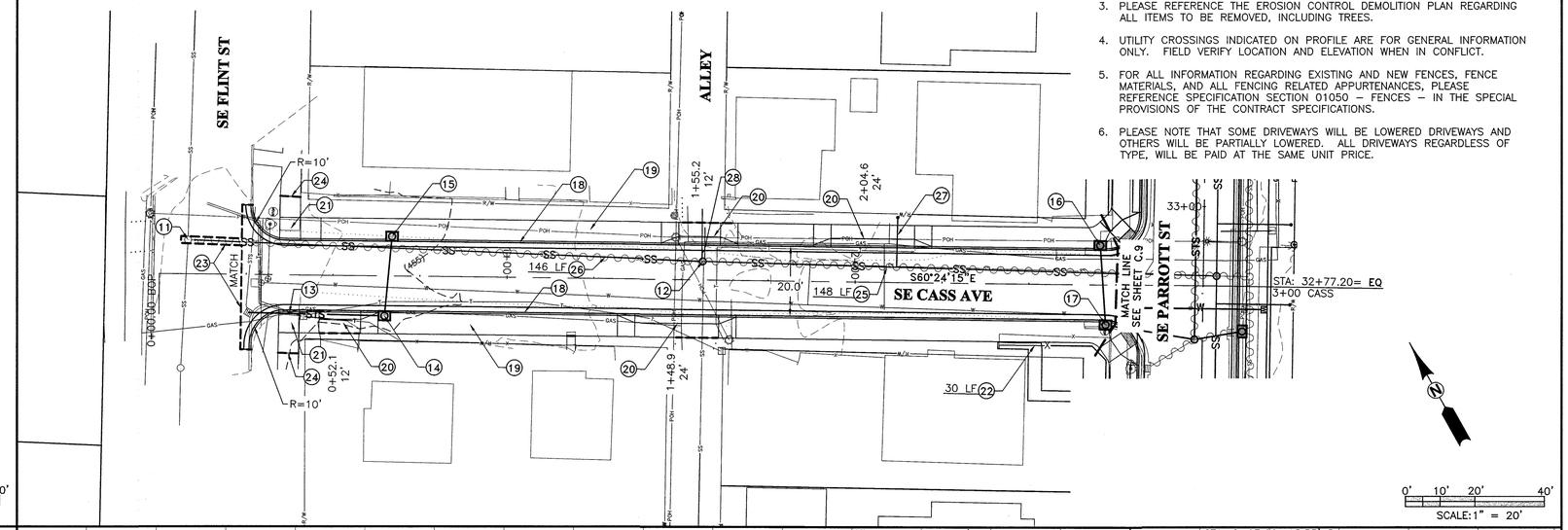

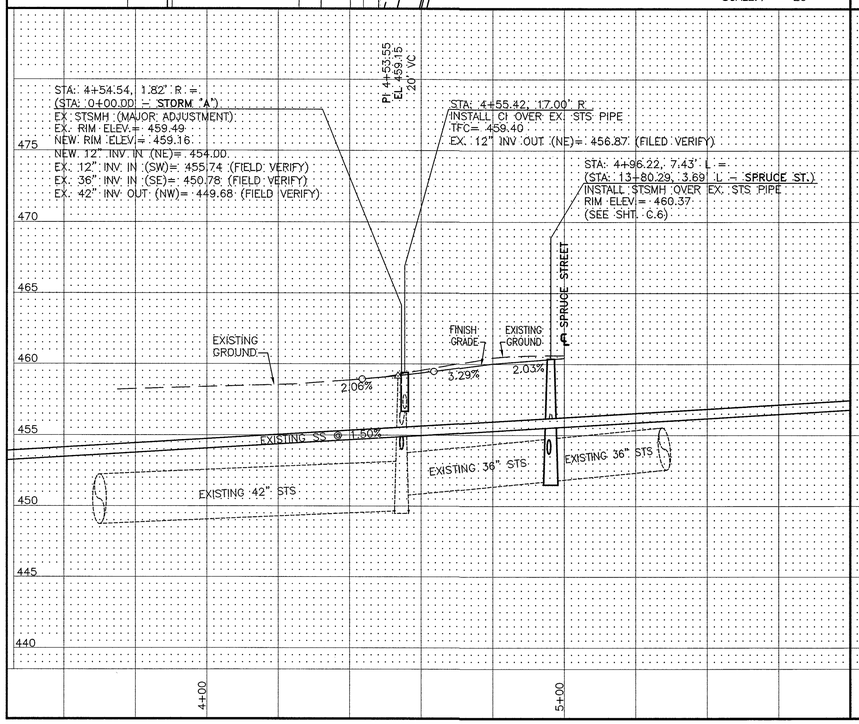

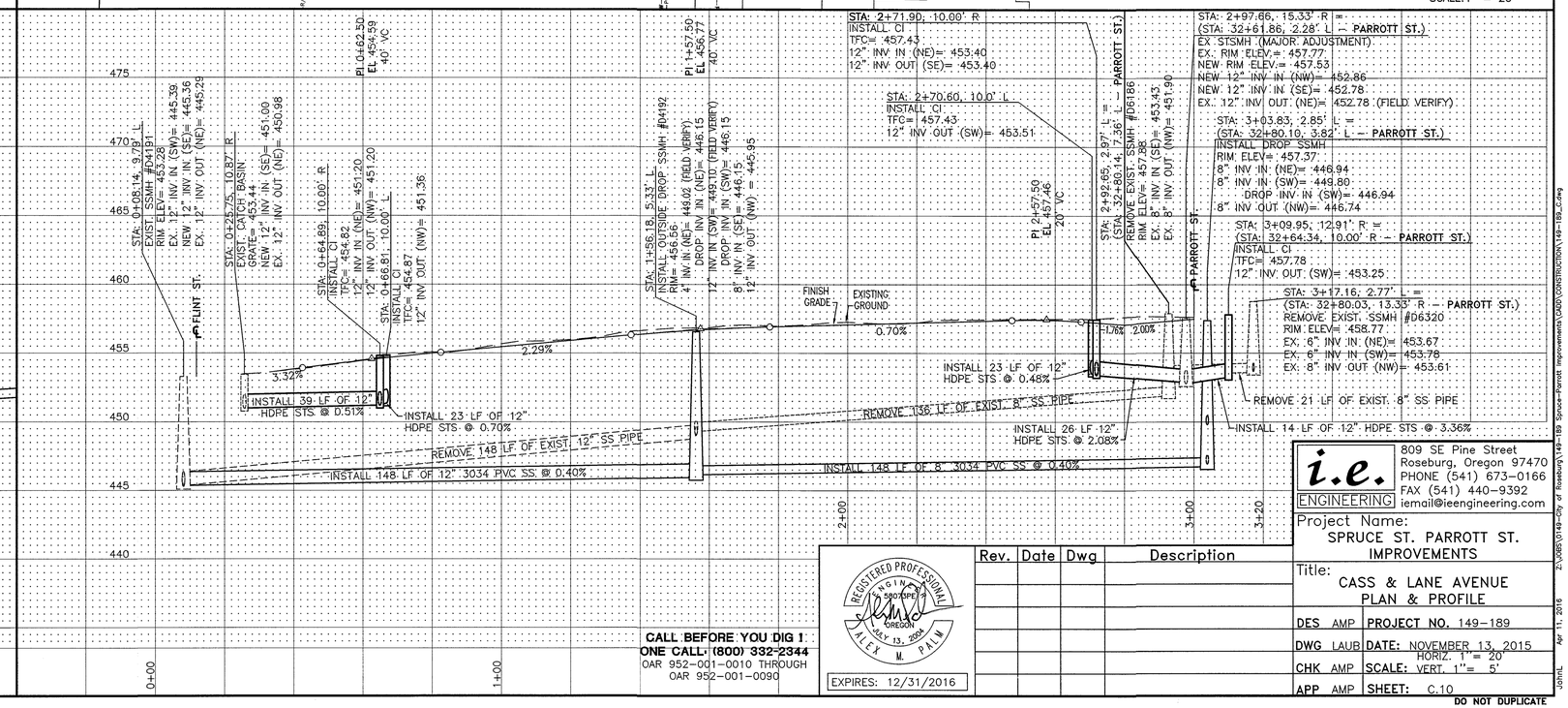

CALL BEFORE YOU DIG 1
ONE CALL: (800) 332-2344
OAR 952–001–0010 THROUGH
OAR 952–001–0090

REGISTERED PROFESSIONAL ENGINEER — OREGON — JULY 13, 2004 — ALEX M. PALM
EXPIRES: 12/31/2016

Rev.	Date	Dwg	Description

i.e. ENGINEERING
809 SE Pine Street
Roseburg, Oregon 97470
PHONE (541) 673–0166
FAX (541) 440–9392
iemail@ieengineering.com

Project Name: SPRUCE ST. PARROTT ST. IMPROVEMENTS

Title: CASS & LANE AVENUE PLAN & PROFILE

DES AMP | PROJECT NO. 149–189
DWG LAUB | DATE: NOVEMBER 13, 2015
CHK AMP | SCALE: HORIZ. 1"= 20' VERT. 1"= 5'
APP AMP | SHEET: C.10

DO NOT DUPLICATE

Z:\JOBS\0149-City of Roseburg\149-189_Spruce-Parrott Improvements\CADD\CONSTRUCTION\149-189_C.dwg
Apr 11, 2016
JDTHL

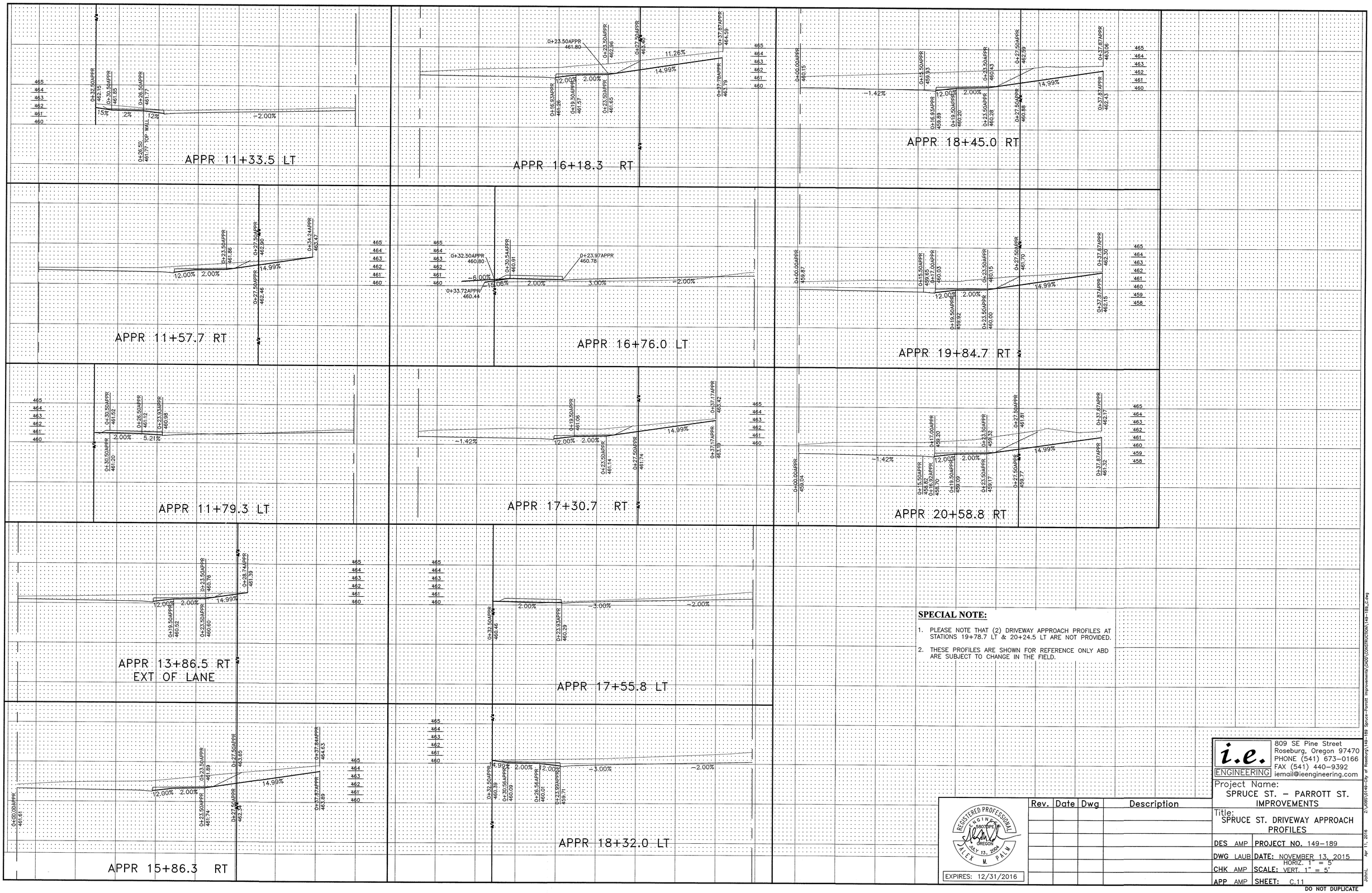

SPECIAL NOTE:

1. PLEASE NOTE THAT (2) DRIVEWAY APPROACH PROFILES AT STATIONS 19+78.7 LT & 20+24.5 LT ARE NOT PROVIDED.
2. THESE PROFILES ARE SHOWN FOR REFERENCE ONLY ABD ARE SUBJECT TO CHANGE IN THE FIELD.

REGISTERED PROFESSIONAL ENGINEER — OREGON — JULY 13, 2004 — ALEX M. PALM

EXPIRES: 12/31/2016

Rev.	Date	Dwg	Description

i.e. ENGINEERING
809 SE Pine Street
Roseburg, Oregon 97470
PHONE (541) 673-0166
FAX (541) 440-9392
iemail@ieengineering.com

Project Name: SPRUCE ST. – PARROTT ST. IMPROVEMENTS

Title: SPRUCE ST. DRIVEWAY APPROACH PROFILES

DES AMP	PROJECT NO. 149-189
DWG LAUB	DATE: NOVEMBER 13, 2015
CHK AMP	SCALE: HORIZ. 1" = 5' VERT. 1" = 5'
APP AMP	SHEET: C.11

DO NOT DUPLICATE

Z:\JOBS\0149-City of Roseburg\149-189 Spruce-Parrott Improvements\CADD\CONSTRUCTION\149-189_C.dwg Apr 11, 2016 JohnL

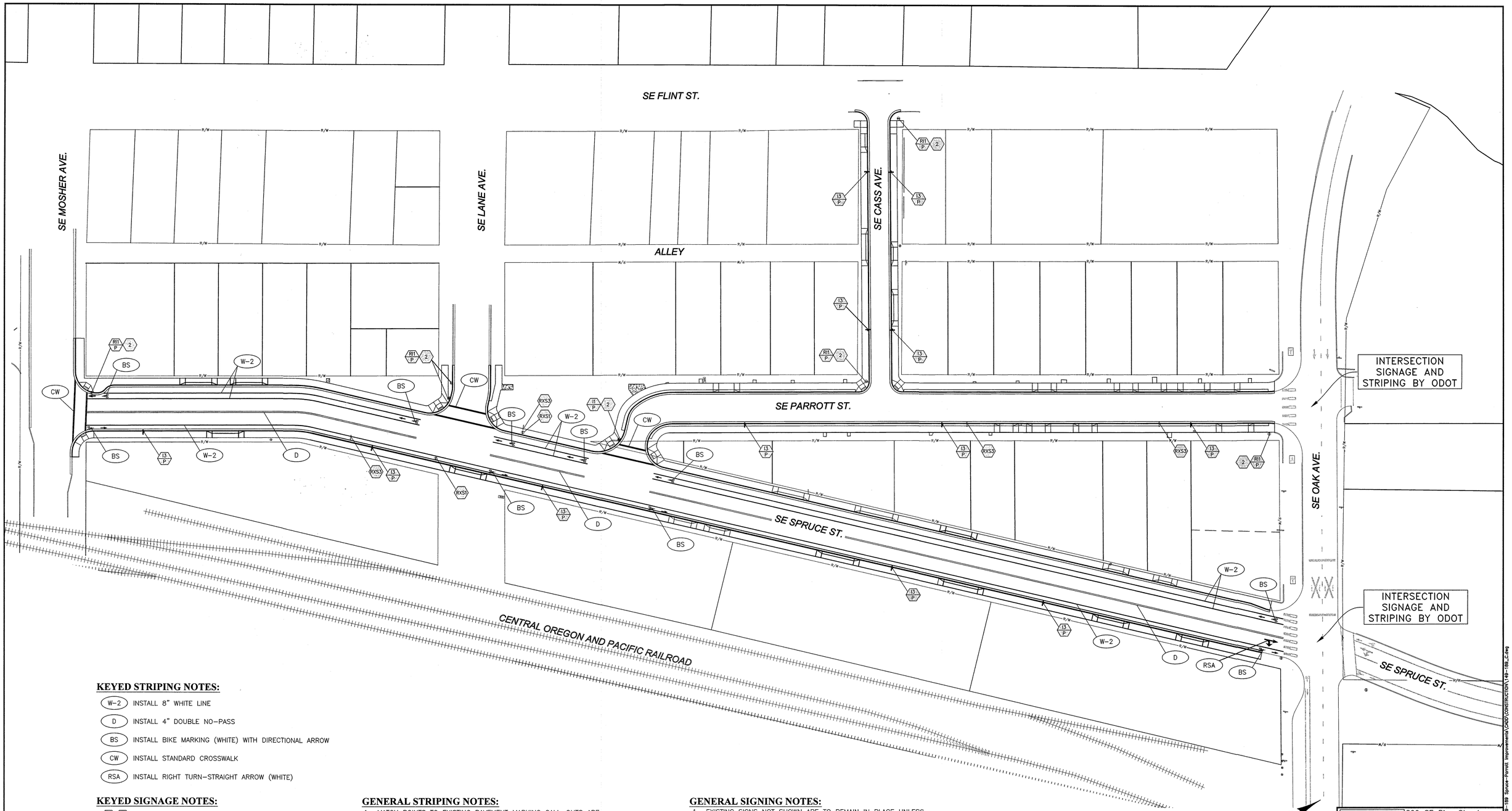

KEYED STRIPING NOTES:

- (W-2) INSTALL 8" WHITE LINE
- (D) INSTALL 4" DOUBLE NO-PASS
- (BS) INSTALL BIKE MARKING (WHITE) WITH DIRECTIONAL ARROW
- (CW) INSTALL STANDARD CROSSWALK
- (RSA) INSTALL RIGHT TURN-STRAIGHT ARROW (WHITE)

KEYED SIGNAGE NOTES:

- (RXSN)(N,N,N) REMOVE EXTG. SIGN (N) AND SIGN POST
- (RXN)(N,N,N) REMOVE EXTG. SIGN FROM UTILITY POLE
- (RIN EX)(N,N,N) REINSTALL EXTG. SIGN (N) ON RELOCATED SIGN POST
- (RIN P)(N,N,N) REINSTALL EXTG. SIGN (N) ON NEW SIGN POST
- (IN P)(N,N,N) INSTALL NEW SIGN (N) ON NEW SIGN POST
- (IN) INSTALL NEW SIGN ON EXISTING POST

N = SIGN NUMBER

SIGN#	SIGN DESIGNATION
1	"STOP"
2	STREET NAME
3	"NO PARKING THIS SIDE OF STREET"

GENERAL STRIPING NOTES:

1. MATCH POINTS TO EXISTING PAVEMENT MARKING CALL-OUTS ARE APPROXIMATE AND SHALL BE FIELD VERIFIED. EXACT LOCATIONS ARE TO BE DETERMINED BY ENGINEER.
2. ALL LONGITUDINAL PAVEMENT MARKINGS SHALL CONFORM TO SECTION 00860.
3. ALL BICYCLE LANE STENCILS SHALL BE TYPE "B-HS" PREFORMED FUSED THERMOPLASTIC FILM HIGH SKID PAVEMENT MARKING MATERIAL. ALL OTHER TRANSVERSE PAVEMENT MARKINGS SHALL BE TYPE "B" PREFORMED, FUSED, THERMOPLASTIC FILM PAVEMENT MARKING MATERIAL.
4. ALL EXISTING STRIPING WITHIN AREA OF WORK TO BE REMOVED.
5. ALL CURBING WITHIN THE AREA OF WORK THAT IS NOT ADJACENT TO PARKING SHALL BE PAINTED YELLOW.
6. ALL PAVEMENT MARKING SHALL MEET MUTCD STANDARDS.

GENERAL SIGNING NOTES:

1. EXISTING SIGNS NOT SHOWN ARE TO REMAIN IN PLACE UNLESS OTHERWISE DIRECTED BY THE ENGINEER.
2. THE LOCATIONS OF SIGN INSTALLATIONS SHOWN ARE APPROXIMATE, WITH EXACT LOCATIONS TO BE DETERMINED IN THE FIELD.
3. MAINTAIN ALL EXISTING STOP SIGNS ON TEMP. MOUNTS.
4. SEE SHEET SD.2 FOR TYPICAL SIGN POST SUPPORT INSTALLATION DETAIL.

GENERAL NOTES:

1. PRIOR TO CONSTRUCTION, CONTRACTOR SHALL COORDINATE WITH CITY AND ENGINEER TO VERIFY THAT THE PROPOSED STRIPING AS SHOWN NEAR THE INTERSECTIONS OF OAK/SPRUCE AND OAK/PARROTT MATCHES THE FINAL STRIPING OF THE ADJACENT PLANNED ODOT HWY 138 E CORRIDOR SOLUTIONS PLANS. MODIFY STRIPING AS NEEDED TO MATCH THE HWY 138 E CORRIDOR SOLUTIONS PLANS AT TIE-IN LOCATIONS.
2. RETURN EXTRA EXISTING SIGNS AND SIGN POST TO CITY SHOP.

CALL BEFORE YOU DIG !
ONE CALL: (800) 332-2344
OAR 952-001-0010 THROUGH
OAR 952-001-0090

0' 20' 40' 80'
SCALE: 1" = 40'

REGISTERED PROFESSIONAL ENGINEER 80074PE OREGON JULY 13, 2004 JALEN M. PALM
EXPIRES: 12/31/2016

Rev.	Date	Dwg	Description

i.e. ENGINEERING
809 SE Pine Street
Roseburg, Oregon 97470
PHONE (541) 673-0166
FAX (541) 440-9392
iemail@ieengineering.com

Project Name:
SPRUCE ST. – PARROTT ST. IMPROVEMENTS

Title:
STRIPING & SIGNAGE PLAN

DES	AMP	PROJECT NO.	149-189
DWG	LAUB	DATE:	NOVEMBER 13, 2015
CHK	AMP	SCALE:	AS SHOWN
APP	AMP	SHEET:	C.12

DO NOT DUPLICATE

Z:\JOBS\0149-City of Roseburg\149-189 Spruce-Parrott Improvements\CADD\CONSTRUCTION\149-189_C.dwg
Apr 11, 2016 JohnL

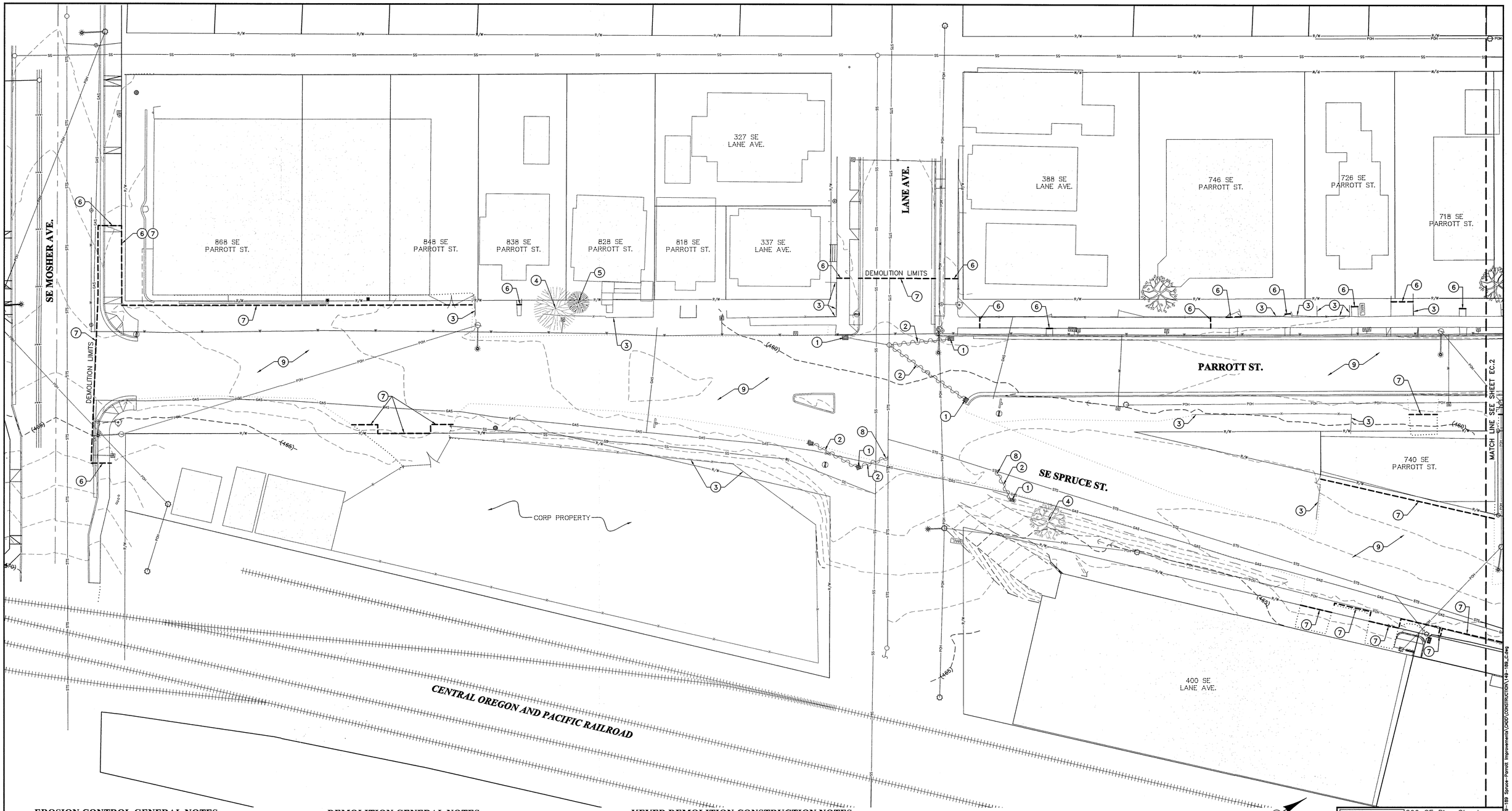

EROSION CONTROL GENERAL NOTES:

1. CONTRACTOR SHALL PLACE BIO-FILTER BAGS AROUND ALL EXISTING CATCH BASINS PER DETAIL ON SHT. EC.3 LOCATED WITHIN THE PROJECT LIMITS AND DOWNSTREAM DRAINAGE AREA. PLEASE NOTE THAT BIO BAGS ARE NOT SHOWN ON THIS SHEET BUT ARE REQUIRED.
2. CONTRACTOR SHALL BE RESPONSIBLE FOR INSTALLING AND MAINTAINING CONSTRUCTION ENTRANCE(S) FOR THE PROJECT PER THE DETAIL ON SHT. EC.3 CONTRACTOR SHALL DETERMINE CONSTRICTION ENTRANCE LOCATIONS PRIOR TO START OF CONSTRUCTION FOR APPROVAL BY THE CITY.

DEMOLITION GENERAL NOTES:

1. ALL EXISTING UTILITY POLES AS SHOWN ON THE CONSTRUCTION PLANS IN CONFLICT WITH THE PROPOSED IMPROVEMENTS WILL BE REMOVED AND RELOCATED BY THE UTILITY COMPANY PRIOR TO CONSTRUCTION.
2. CONTRACTOR SHALL REMOVE AND DISPOSE ALL EXISTING ASPHALT, ROCK BASE, FILTER FABRIC, CONCRETE, SIDEWALKS, CURBING, GUTTERS AND ANY OTHER ITEMS AS NEEDED TO CONSTRUCT THE PROPOSED IMPROVEMENTS.

KEYED DEMOLITION CONSTRUCTION NOTES:

1. REMOVE EXISTING CATCH BASIN (AND RELATED PIPING IF NEEDED)
2. REMOVE/ABANDON EXISTING PIPE
3. REMOVE EXISTING FENCE
4. REMOVE EXISTING TREE, INCLUDE ROOT BALL
5. PROTECT EXISTING TREE DURING CONSTRUCTION
6. SAWCUT & REMOVE CONCRETE TO NEAT EDGE
7. SAWCUT & REMOVE EXISTING AC TO NEAT EDGE
8. CAP AND PLUG EXISTING STS STUBOUT
9. REMOVE EXISTING STREET SECTION, COMPLETE: INCLUDED BUT NOT LIMITED TO EXISTING ASPHALT, BASEROCK, FILTER FABRIC, CURB, GUTTER & SIDEWALK.

ABANDON/REMOVE PIPE (SEE SEC 00490)

CALL BEFORE YOU DIG !
ONE CALL: (800) 332-2344
OAR 952-001-0010 THROUGH OAR 952-001-0090

REGISTERED PROFESSIONAL ENGINEER 58072PE OREGON MAY 13, 2004 ALEX M. PAIN

EXPIRES: 12/31/2016

Rev.	Date	Dwg	Description

i.e. ENGINEERING
809 SE Pine Street
Roseburg, Oregon 97470
PHONE (541) 673-0166
FAX (541) 440-9392
iemail@ieengineering.com

Project Name:
SPRUCE ST. – PARROTT ST. IMPROVEMENTS

Title:
EROSION CONTROL DEMOLITION PLAN

DES	AMP	PROJECT NO.	149-189
DWG	LAUB	DATE:	NOVEMBER 13, 2015
CHK	AMP	SCALE:	AS SHOWN
APP	AMP	SHEET:	EC.1

DO NOT DUPLICATE

Z:\JOBS\0149-City of Roseburg\149-189 Spruce-Parrott Improvements\CADD\CONSTRUCTION\149-189_C.dwg
Apr 11, 2016
JohnL

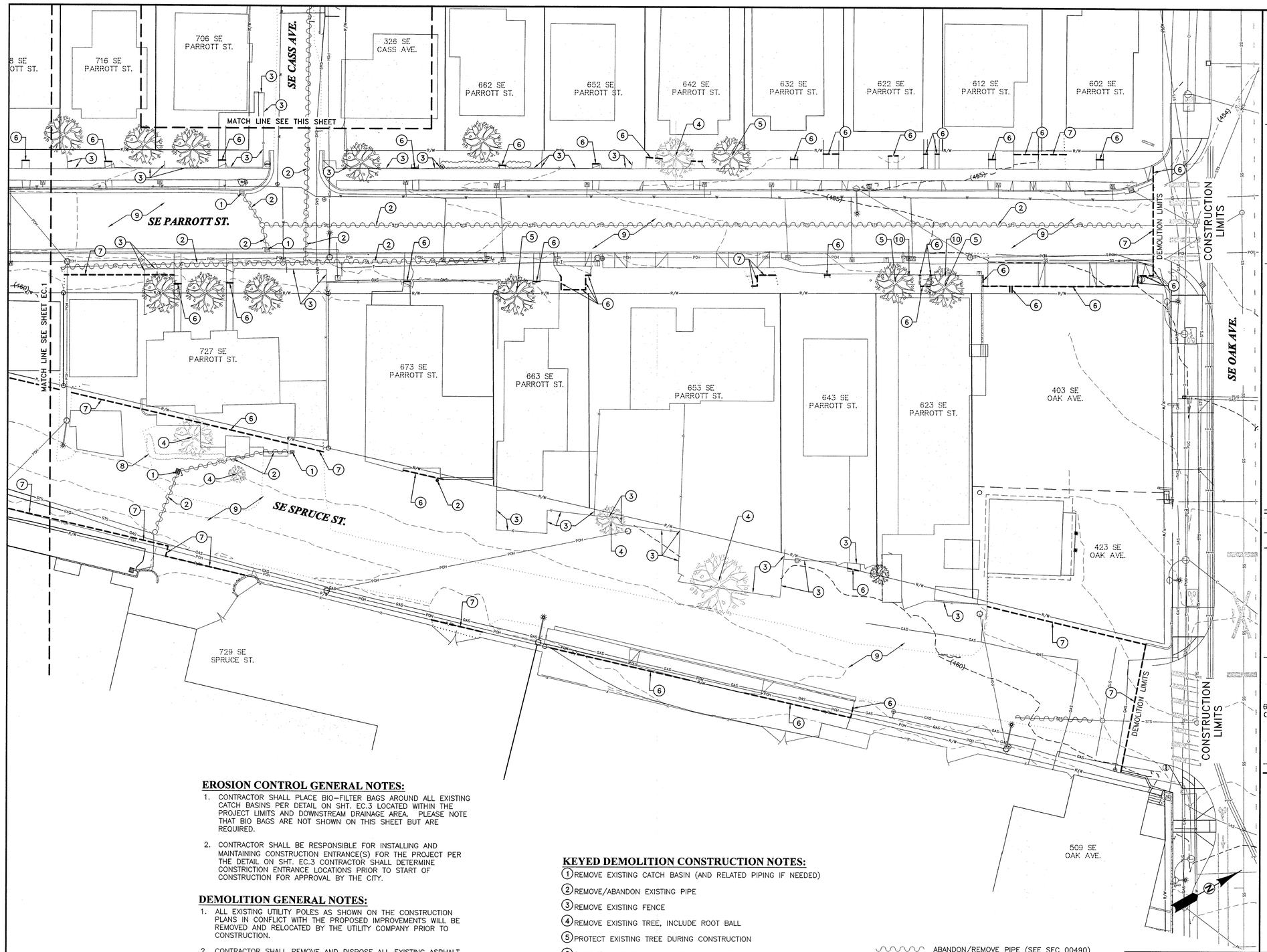

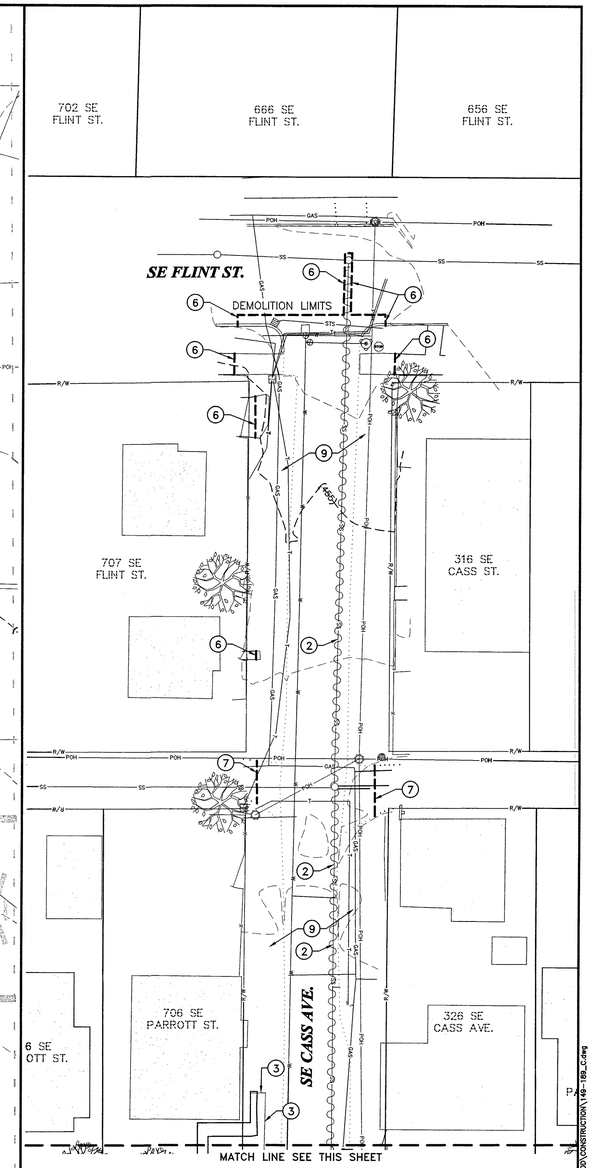

EROSION CONTROL GENERAL NOTES:

1. CONTRACTOR SHALL PLACE BIO–FILTER BAGS AROUND ALL EXISTING CATCH BASINS PER DETAIL ON SHT. EC.3 LOCATED WITHIN THE PROJECT LIMITS AND DOWNSTREAM DRAINAGE AREA. PLEASE NOTE THAT BIO BAGS ARE NOT SHOWN ON THIS SHEET BUT ARE REQUIRED.
2. CONTRACTOR SHALL BE RESPONSIBLE FOR INSTALLING AND MAINTAINING CONSTRUCTION ENTRANCE(S) FOR THE PROJECT PER THE DETAIL ON SHT. EC.3 CONTRACTOR SHALL DETERMINE CONSTRICTION ENTRANCE LOCATIONS PRIOR TO START OF CONSTRUCTION FOR APPROVAL BY THE CITY.

DEMOLITION GENERAL NOTES:

1. ALL EXISTING UTILITY POLES AS SHOWN ON THE CONSTRUCTION PLANS IN CONFLICT WITH THE PROPOSED IMPROVEMENTS WILL BE REMOVED AND RELOCATED BY THE UTILITY COMPANY PRIOR TO CONSTRUCTION.
2. CONTRACTOR SHALL REMOVE AND DISPOSE ALL EXISTING ASPHALT, ROCK BASE, FILTER FABRIC, CONCRETE, SIDEWALKS, CURBING, GUTTERS AND ANY OTHER ITEMS AS NEEDED TO CONSTRUCT THE PROPOSED IMPROVEMENTS.
3. EXISTING BUILDINGS AND STRUCTURES AS SHOWN ON THESE PLANS EXTENDING INTO THE PUBLIC RIGHT–OF–WAY SHALL BE REMOVED BY OTHERS PRIOR TO CONSTRUCTION.

KEYED DEMOLITION CONSTRUCTION NOTES:

1. REMOVE EXISTING CATCH BASIN (AND RELATED PIPING IF NEEDED)
2. REMOVE/ABANDON EXISTING PIPE
3. REMOVE EXISTING FENCE
4. REMOVE EXISTING TREE, INCLUDE ROOT BALL
5. PROTECT EXISTING TREE DURING CONSTRUCTION
6. SAWCUT & REMOVE CONCRETE TO NEAT EDGE
7. SAWCUT & REMOVE EXISTING AC TO NEAT EDGE
8. REMOVE HEDGE
9. REMOVE EXISTING STREET SECTION, COMPLETE: INCLUDED BUT NOT LIMITED TO EXISTING ASPHALT, BASE ROCK, FILTER FABRIC, CURB, GUTTER & SIDEWALK.
10. REMOVE EXISTING OBSCURED RETAINING WALL LOCATED BEHIND EXISTING SIDEWALK COMPLETE IN PLACE AND SLOPE EX. GROUND AS NEEDED.

ABANDON/REMOVE PIPE (SEE SEC 00490)

CALL BEFORE YOU DIG !
ONE CALL: (800) 332-2344
OAR 952–001–0010 THROUGH
OAR 952–001–0090

REGISTERED PROFESSIONAL ENGINEER
SEAL OF THE
OREGON
JULY 13, 2004
ALEX M. PALM
EXPIRES: 12/31/2016

0' 10' 20' 40'
SCALE: 1" = 20'

Rev.	Date	Dwg	Description

i.e. ENGINEERING
809 SE Pine Street
Roseburg, Oregon 97470
PHONE (541) 673–0166
FAX (541) 440–9392
iemail@ieengineering.com

Project Name:
SPRUCE ST. – PARROTT ST. IMPROVEMENTS

Title:
EROSION CONTROL DEMOLITION PLAN

DES	AMP	PROJECT NO. 149–189
DWG	LAUB	DATE: NOVEMBER 13, 2015
CHK	AMP	SCALE: AS SHOWN
APP	AMP	SHEET: EC.2

DO NOT DUPLICATE

Z:\JOBS\0149-City of Roseburg\149-189 Spruce-Parrott Improvements\CADD\CONSTRUCTION\149-189_C.dwg
Apr 11, 2016
JohnL

STANDARD EROSION AND SEDIMENT CONTROL PLAN DRAWING NOTES:

1. Hold a pre–construction meeting of project construction personnel that includes the inspector to discuss erosion and sediment control measures and construction limits. (Schedule A.8.c.i.(3))
2. All inspections must be made in accordance with DEQ 1200–C permit requirements. (Schedule A.12.b and Schedule B.1)
3. Inspection logs must be kept in accordance with DEQ's 1200–C permit requirements. (Schedule B.1.c and B.2)
4. Retain a copy of the ESCP and all revisions on site and make it available on request to DEQ, Agent, or the local municipality. During inactive periods of greater than seven (7) consecutive calendar days, the above records must be retained by the permit registrant but do not need to be at the construction site. (Schedule B.2.c)
5. All permit registrants must implement the ESCP. Failure to implement any of the control measures or practices described in the ESCP is a violation of the permit. (Schedule A 8.a)
6. The ESCP must be accurate and reflect site conditions. (Schedule A.12.c.i)
7. Submission of all ESCP revisions is not required. Submittal of the ESCP revisions is only under specific conditions. Submit all necessary revision to DEQ or Agent within 10 days. (Schedule A.12.c.iv. and v)
8. Phase clearing and grading to the maximum extent practical to prevent exposed inactive areas from becoming a source of erosion. (Schedule A.7.a.iii)
9. Identify, mark, and protect (by construction fencing or other means) critical riparian areas and vegetation including important trees and associated rooting zones, and vegetation areas to be preserved. Identify vegetative buffer zones between the site and sensitive areas (e.g., wetlands), and other areas to be preserved, especially in perimeter areas. (Schedule A.8.c.i.(1) and (2))
10. Preserve existing vegetation when practical and re–vegetate open areas. Re–vegetate open areas when practicable before and after grading or construction. Identify the type of vegetative seed mix used. (Schedule A.7.a.v)
11. Maintain and delineate any existing natural buffer within the 50–feet of waters of the state. (Schedule A.7.b.i.and (2(a)(b))
12. Install perimeter sediment control, including storm drain inlet protection as well as all sediment basins, traps, and barriers prior to land disturbance. (Schedule A.8.c.i.(5))
13. Control both peak flow rates and total stormwater volume, to minimize erosion at outlets and downstream channels and stream banks. (Schedule A.7.c)
14. Control sediment as needed along the site perimeter and at all operational internal storm drain inlets at all times during construction, both internally and at the site boundary. (Schedule A.7.d.i)
15. Establish concrete truck and other concrete equipment washout areas before beginning concrete work. (Schedule A.8.c.i.(6))
16. Apply temporary and/or permanent soil stabilization measures immediately on all disturbed areas as grading progresses. Temporary or permanent stabilization measures are not required for areas that are intended to be left un–vegetated, such as dirt access roads or utility pole pads.(Schedule A.8.c.ii.(3))
17. Establish material and waste storage areas, and other non–stormwater controls. (Schedule A.8.c.i.(7))
18. Prevent tracking of sediment onto public or private roads using BMPs such as: construction entrance, graveled (or paved) exits and parking areas, gravel all unpaved roads located onsite, or use an exit tire wash. These BMPs must be in place prior to land disturbing activities. (Schedule A 7.d.ii and A.8.c.i(4))
19. When trucking saturated soils from the site, either use water–tight trucks or drain loads on site. (Schedule A.7.d.ii.(5))
20. Control prohibited discharges from leaving the construction site, i.e., concrete wash–out, wastewater from cleanout of stucco, paint and curing compounds. (Schedule A.6)
21. Use BMPs to prevent or minimize stormwater exposure to pollutants from spills; vehicle and equipment fueling, maintenance, and storage; other cleaning and maintenance activities; and waste handling activities. These pollutants include fuel, hydraulic fluid, and other oils from vehicles and machinery, as well as debris, fertilizer, pesticides and herbicides, paints, solvents, curing compounds and adhesives from construction operations. (Schedule A.7.e.i.(2))
22. Implement the following BMPs when applicable: written spill prevention and response procedures, employee training on spill prevention and proper disposal procedures, spill kits in all vehicles, regular maintenance schedule for vehicles and machinery, material delivery and storage controls, training and signage, and covered storage areas for waste and supplies. (Schedule A. 7.e.iii.)
23. Use water, soil–binding agent or other dust control technique as needed to avoid wind–blown soil. (Schedule A 7.a.iv)
24. The application rate of fertilizers used to reestablish vegetation must follow manufacturer's recommendations to minimize nutrient releases to surface waters. Exercise caution when using time–release fertilizers within any waterway riparian zone. (Schedule A.9.b.iii)
25. If an active treatment system (for example, electro–coagulation, flocculation, filtration, etc.) for sediment or other pollutant removal is employed, submit an operation and maintenance plan (including system schematic, location of system, location of inlet, location of discharge, discharge dispersion device design, and a sampling plan and frequency) before operating the treatment system. Obtain plan approval before operating the treatment system. Operate and maintain the treatment system according to manufacturer's specifications. (Schedule A.9.d)
26. Temporarily stabilize soils at the end of the shift before holidays and weekends, if needed. The registrant is responsible for ensuring that soils are stable during rain events at all times of the year. (Schedule A 7.b)
27. As needed based on weather conditions, at the end of each workday soil stockpiles must be stabilized or covered, or other BMPs must be implemented to prevent discharges to surface waters or conveyance systems leading to surface waters. (Schedule A 7.e.ii.(2))
28. Construction activities must avoid or minimize excavation and bare ground activities during wet weather. (Schedule A.7.a.i)
29. Sediment fence: remove trapped sediment before it reaches one third of the above ground fence height and before fence removal. (Schedule A.9.c.i)
30. Other sediment barriers (such as biobags): remove sediment before it reaches two inches depth above ground height and before BMP removal. (Schedule A.9.c.i)
31. Catch basins: clean before retention capacity has been reduced by fifty percent. Sediment basins and sediment traps: remove trapped sediments before design capacity has been reduced by fifty percent and at completion of project. (Schedule A.9.c.iii & iv)
32. Within 24 hours, significant sediment that has left the construction site, must be remediated. Investigate the cause of the sediment release and implement steps to prevent a recurrence of the discharge within the same 24 hours. Any in–stream clean–up of sediment shall be performed according to the Oregon Division of State Lands required timeframe. (Schedule A.9.b.i)
33. The intentional washing of sediment into storm sewers or drainage ways must not occur. Vacuuming or dry sweeping and material pickup must be used to cleanup released sediments. (Schedule A.9.b.ii)
34. The entire site must be temporarily stabilized using vegetation or a heavy mulch layer, temporary seeding, or other method should all construction activities cease for 30 days or more. (Schedule A.7.f.i)
35. Provide temporary stabilization for that portion of the site where construction activities cease for 14 days or more with a covering of blown straw and a tackifier, loose straw, or an adequate covering of compost mulch until work resumes on that portion of the site. (Schedule A.7.f.ii)
36. Do not remove temporary sediment control practices until permanent vegetation or other cover of exposed areas is established. Once construction is complete and the site is stabilized, all temporary erosion controls and retained soils must be removed and disposed of properly, unless doing so conflicts with local requirements. (Schedule A.8.c.iii(1) and D.3.c.ii and iii)

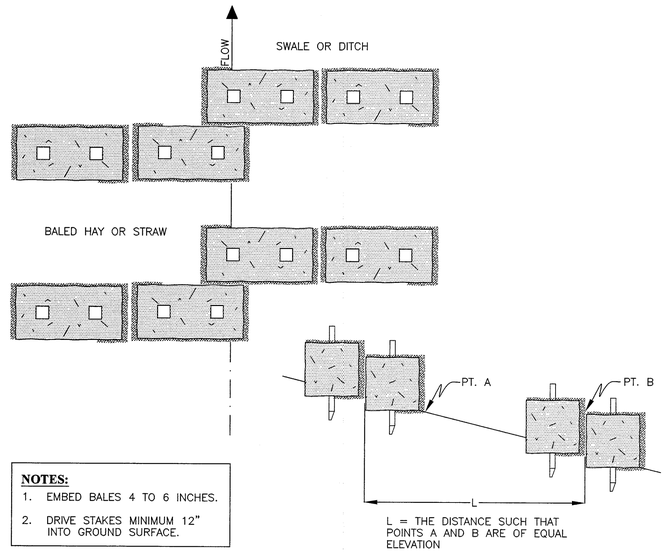

NOTES:
1. EMBED BALES 4 TO 6 INCHES.
2. DRIVE STAKES MINIMUM 12" INTO GROUND SURFACE.

SPACING BETWEEN BARRIERS

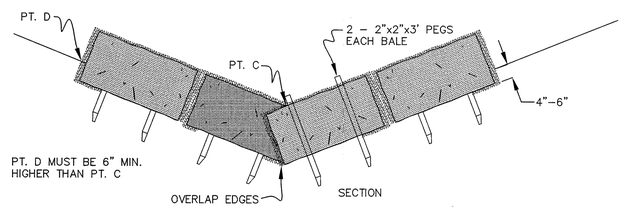

STRAW BALE SEDIMENT BARRIERS IN DITCHES OR SWALES

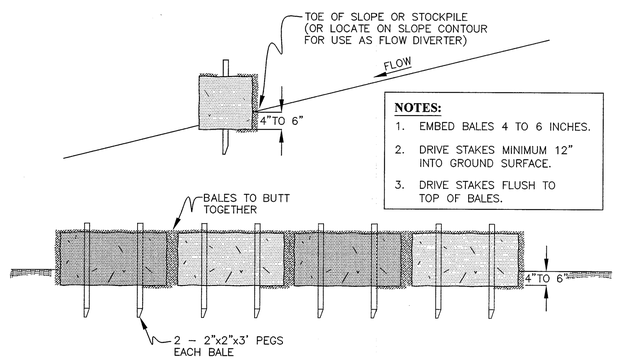

NOTES:
1. EMBED BALES 4 TO 6 INCHES.
2. DRIVE STAKES MINIMUM 12" INTO GROUND SURFACE.
3. DRIVE STAKES FLUSH TO TOP OF BALES.

STRAW BALE SEDIMENT BARRIER

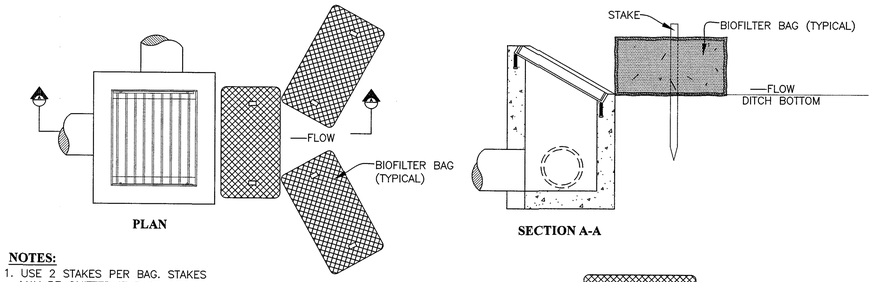

PLAN

SECTION A-A

NOTES:
1. USE 2 STAKES PER BAG. STAKES MAY BE OMITTED IF BAGS ARE PLACED ON PAVEMENT SURFACE.
2. OVERLAP ALL BAG JOINTS 6".

DITCH INLET

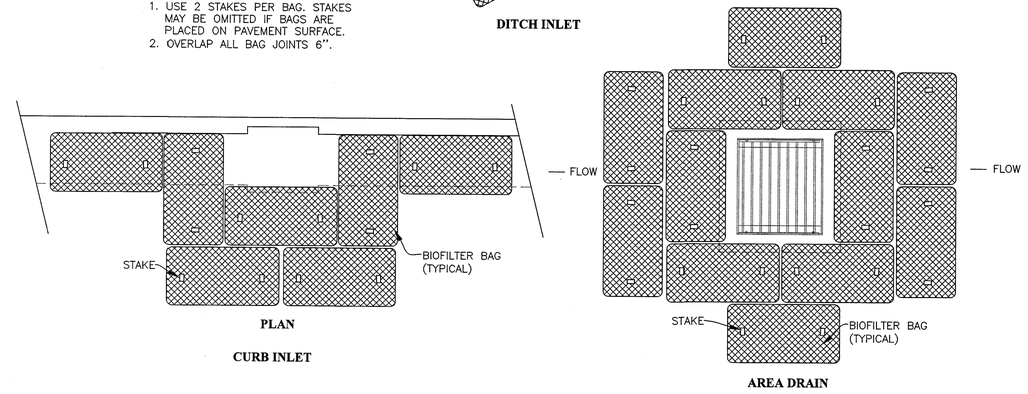

PLAN

CURB INLET

AREA DRAIN

INLET PROTECTION (TYPE 4) BIOFILTER BAGS

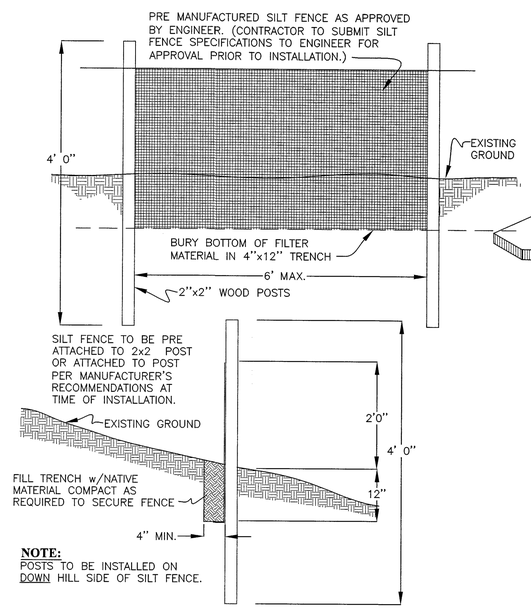

NOTE:
POSTS TO BE INSTALLED ON DOWN HILL SIDE OF SILT FENCE.

SILT FENCE INSTALLATION DETAIL

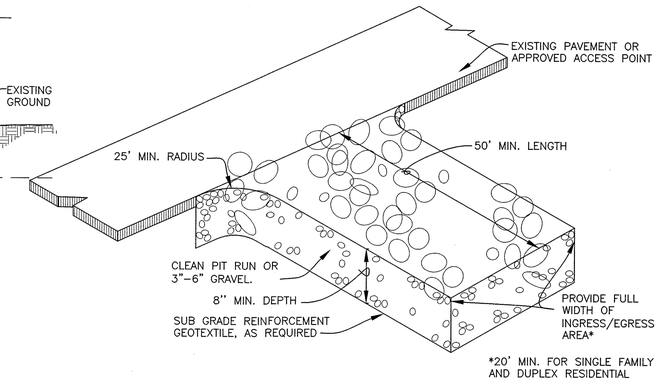

GRAVEL CONSTRUCTION ENTRANCE

CALL BEFORE YOU DIG !
ONE CALL: (800) 332-2344
OAR 952–001–0010 THROUGH
OAR 952–001–0090

THE PERMITTEE IS REQUIRED TO MEET ALL THE CONDITIONS OF THE 1200C PERMIT. THIS ESCP AND GENERAL CONDITIONS HAVE BEEN DEVELOPED TO FACILITATE COMPLIANCE WITH THE 1200C PERMIT REQUIREMENTS. IN CASES OF DISCREPANCIES OR OMISSIONS, THE 1200C PERMIT REQUIREMENTS SUPERSCEDE REQUIREMENTS OF THIS PLAN.

REGISTERED PROFESSIONAL ENGINEER 58073PE OREGON MAY 13, 2004 ALEX M. PALM

EXPIRES: 12/31/2016

Rev.	Date	Dwg	Description

i.e. ENGINEERING
809 SE Pine Street
Roseburg, Oregon 97470
PHONE (541) 673–0166
FAX (541) 440–9392
iemail@ieengineering.com

Project Name: SPRUCE ST. – PARROTT ST. IMPROVEMENTS

Title: EROSION CONTROL DETAILS

DES AMP	PROJECT NO. 149–189
DWG LAUB	DATE: NOVEMBER 13, 2015
CHK AMP	SCALE: NONE
APP AMP	SHEET: EC.3

DO NOT DUPLICATE

Z:\JOBS\0149-City of Roseburg\149-189 Spruce-Parrott Improvements\CADD\CONSTRUCTION\149-189_C-DETAILS.dwg Apr 11, 2016 JOHNL

STAGE 1
WEST SIDE SPRUCE STREET

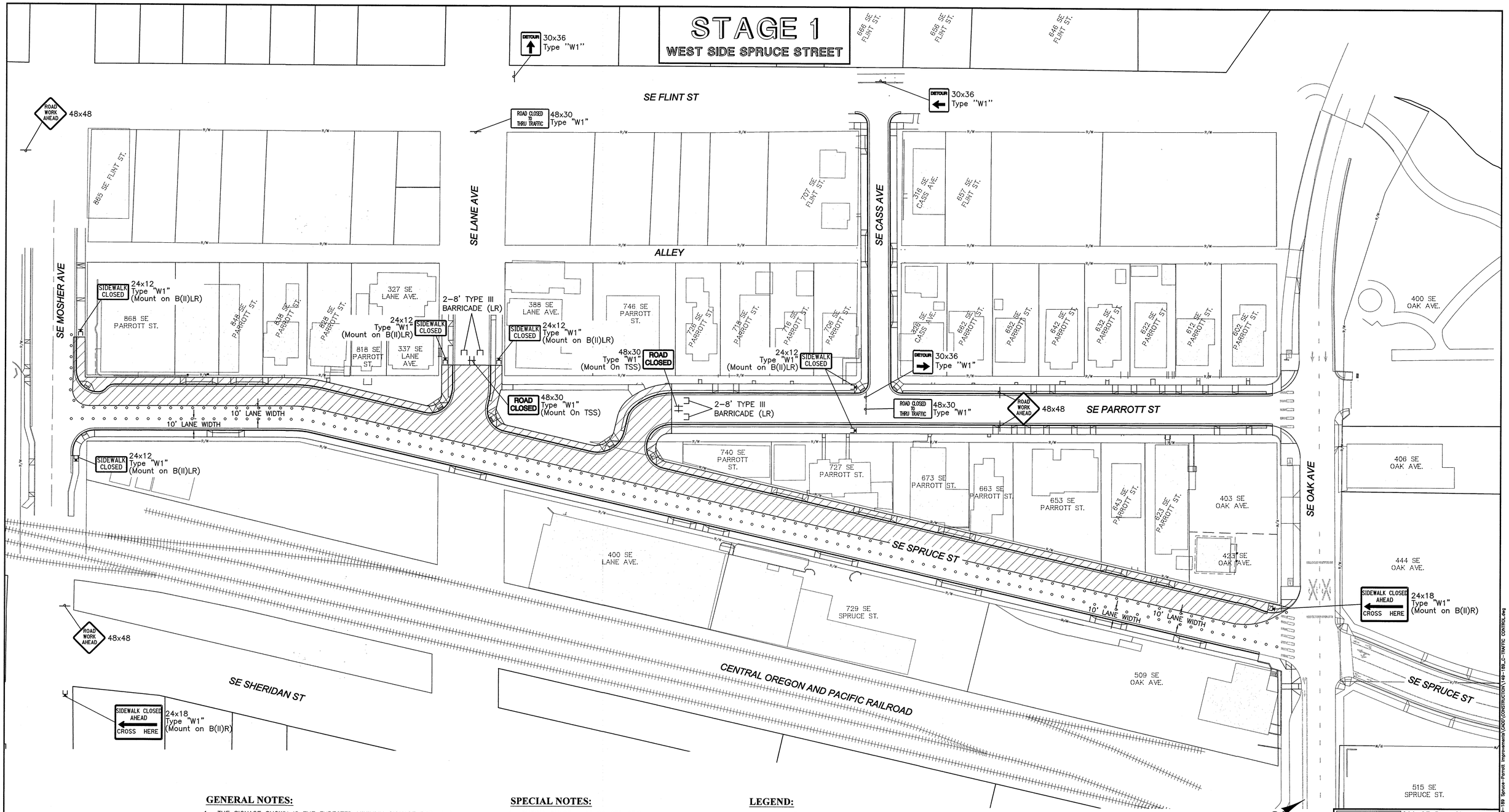

GENERAL NOTES:

1. THE SIGNAGE SHOWN IS THE EXPECTED MINIMUM SIGNAGE REQUIRED. CONTRACTOR TO MODIFY AS REQUIRED.
2. LOCATIONS OF TRAFFIC CONTROL DEVICES SHOWN ARE APPROXIMATE. CONTRACTOR TO LOCATE THE TRAFFIC CONTROL DEVICES PER FIELD CONDITIONS.
3. CONTRACTOR IS RESPONSIBLE FOR MONITORING TRAFFIC CONTROL DEVICES THROUGHOUT THE DAY AND IS TO MODIFY AS REQUIRED FOR SAFETY AND MAINTAINING ACCESS.
4. ODOT WILL BE PROVIDING TRAFFIC CONTROL ON OAK AVENUE DURING THE CONSTRUCTION OF THE PROJECT.

SPECIAL NOTES:

1. DURING PHASE 1 OF CONSTRUCTION, WHICH WILL BE THE WEST SIDE OF SPRUCE STREET, CONTRACTOR SHALL MAINTAIN TWO LANES OF TRAFFIC (ONE IN EACH DIRECTION) ALONG SPRUCE. LANES SHALL HAVE A MINIMUM WIDTH OF 10'.

LEGEND:

- 28" TUBULAR MARKERS @ 10' SPACING (MAX)
- PEDESTRIAN CHANNELIZATION DEVICE (PCD)
- UNDER CONSTRUCTION
- SIGN ON BARRICADE
- SIGN
- BARRICADE

CALL BEFORE YOU DIG !
ONE CALL: (800) 332-2344
OAR 952-001-0010 THROUGH
OAR 952-001-0090

0' 20' 40' 80'
SCALE: 1" = 40'

REGISTERED PROFESSIONAL ENGINEER
OREGON
JULY 13, 2004
ALEX M. PALM
EXPIRES: 12/31/2017

Rev.	Date	Dwg	Description

i.e. ENGINEERING
809 SE Pine Street
Roseburg, Oregon 97470
PHONE (541) 673-0166
FAX (541) 440-9392
email@ieengineering.com

Project Name:
SPRUCE ST. – PARROTT ST. IMPROVEMENTS

Title:
TRAFFIC CONTROL PLAN (STAGE 1)

DES	AMP	PROJECT NO.	149-189
DWG	LAUB	DATE:	NOVEMBER 13, 2015
CHK	AMP	SCALE:	AS SHOWN
APP	AMP	SHEET:	TC.1

DO NOT DUPLICATE
Z:\2085\0149-City of Roseburg\149-189 Spruce-Parrott Improvements\CADD\CONSTRUCTION\149-189_C-TRAFFIC CONTROL.dwg
Apr 11, 2016 - 10:01PM

STAGE 2
EAST SIDE SPRUCE STREET

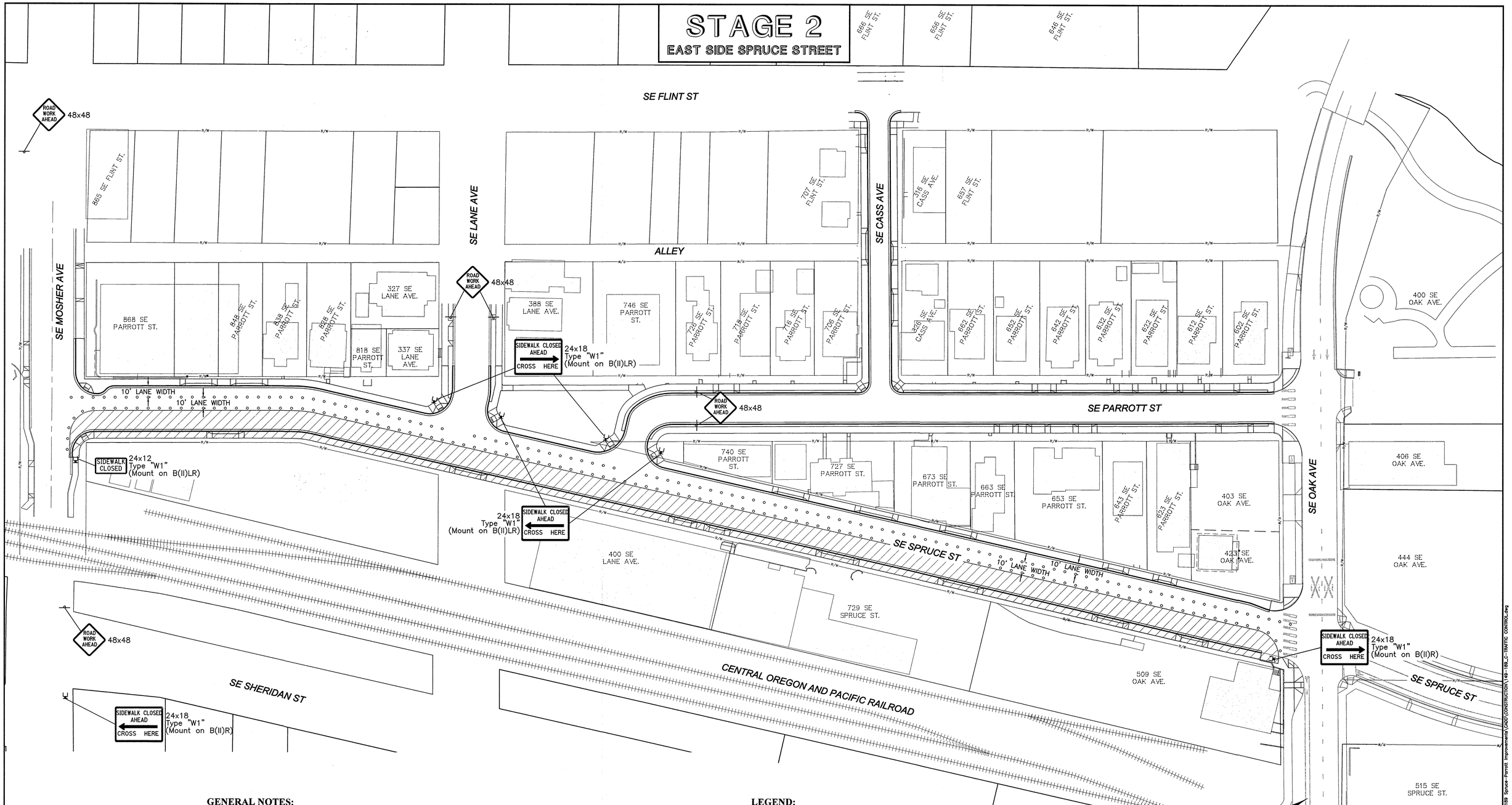

GENERAL NOTES:

1. THE SIGNAGE SHOWN IS THE EXPECTED MINIMUM SIGNAGE REQUIRED. CONTRACTOR TO MODIFY AS REQUIRED.
2. LOCATIONS OF TRAFFIC CONTROL DEVICES SHOWN ARE APPROXIMATE. CONTRACTOR TO LOCATE THE TRAFFIC CONTROL DEVICES PER FIELD CONDITIONS.
3. CONTRACTOR IS RESPONSIBLE FOR MONITORING TRAFFIC CONTROL DEVICES THROUGHOUT THE DAY AND IS TO MODIFY AS REQUIRED FOR SAFETY AND MAINTAINING ACCESS.

LEGEND:

- 28" TUBULAR MARKERS @ 10' SPACING (MAX)
- PEDESTRIAN CHANNELIZATION DEVICE (PCD)
- UNDER CONSTRUCTION
- SIGN ON BARRICADE
- SIGN
- BARRICADE

CALL BEFORE YOU DIG !
ONE CALL: (800) 332-2344
OAR 952-001-0010 THROUGH
OAR 952-001-0090

0' 20' 40' 80'
SCALE: 1" = 40'

REGISTERED PROFESSIONAL ENGINEER — OREGON — MAY 13, 2004 — ALEX M. PALM

EXPIRES: 12/31/2016

Rev.	Date	Dwg	Description

i.e. ENGINEERING
809 SE Pine Street
Roseburg, Oregon 97470
PHONE (541) 673-0166
FAX (541) 440-9392
iemail@ieengineering.com

Project Name:
SPRUCE ST. – PARROTT ST. IMPROVEMENTS

Title:
TRAFFIC CONTROL PLAN (STAGE 2)

DES	AMP	PROJECT NO. 149-189	
DWG	LAUB	DATE: NOVEMBER 13, 2015	
CHK	AMP	SCALE: AS SHOWN	
APP	AMP	SHEET: TC.2	

DO NOT DUPLICATE

Z:\JOBS\149-City of Roseburg\149-189 Spruce-Parrott Improvements\CADD\CONSTRUCTION\149-189_C-TRAFFIC CONTROL.dwg
Apr 11, 2016
JohnL

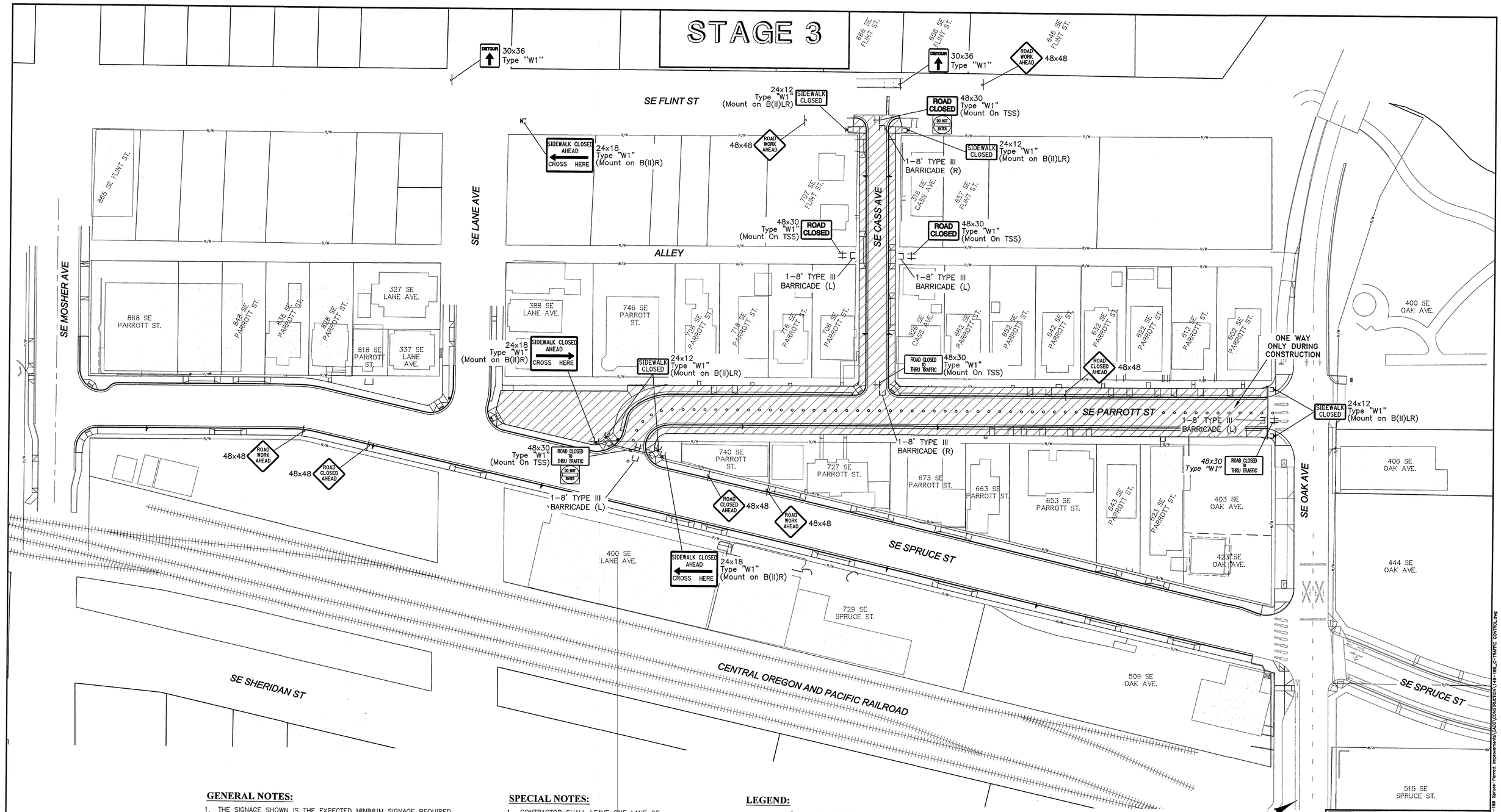

GENERAL NOTES:

1. THE SIGNAGE SHOWN IS THE EXPECTED MINIMUM SIGNAGE REQUIRED. CONTRACTOR TO MODIFY AS REQUIRED.
2. LOCATIONS OF TRAFFIC CONTROL DEVICES SHOWN ARE APPROXIMATE. CONTRACTOR TO LOCATE THE TRAFFIC CONTROL DEVICES PER FIELD CONDITIONS.
3. CONTRACTOR IS RESPONSIBLE FOR MONITORING TRAFFIC CONTROL DEVICES THROUGHOUT THE DAY AND IS TO MODIFY AS REQUIRED FOR SAFETY AND MAINTAINING ACCESS.

SPECIAL NOTES:

1. CONTRACTOR SHALL LEAVE ONE LANE OF SOUTHBOUND TRAFFIC OPEN ON PARROTT AT ALL TIMES DURING CONSTRUCTION.

LEGEND:

- 28" TUBULAR MARKERS @ 10' SPACING (MAX)
- PEDESTRIAN CHANNELIZATION DEVICE (PCD)
- UNDER CONSTRUCTION
- SIGN ON BARRICADE
- SIGN
- BARRICADE

CALL BEFORE YOU DIG !
ONE CALL: (800) 332-2344
OAR 952-001-0010 THROUGH
OAR 952-001-0090

0' 20' 40' 80'
SCALE: 1" = 40'

REGISTERED PROFESSIONAL ENGINEER
58073PE
OREGON
JULY 13, 2004
ALEX M. PALM
EXPIRES: 12/31/2016

Rev.	Date	Dwg	Description

i.e. ENGINEERING
809 SE Pine Street
Roseburg, Oregon 97470
PHONE (541) 673-0166
FAX (541) 440-9392
iemail@ieengineering.com

Project Name:
SPRUCE ST. – PARROTT ST. IMPROVEMENTS

Title:
TRAFFIC CONTROL PLAN (STAGE 3)

DES	AMP	PROJECT NO. 149-189
DWG	LAUB	DATE: NOVEMBER 13, 2015
CHK	AMP	SCALE: AS SHOWN
APP	AMP	SHEET: TC.3

Z:\JOBS\149-City of Roseburg\149-189 Spruce-Parrott Improvements\CADD\CONSTRUCTION\149-189_C-TRAFFIC CONTROL.dwg
Apr 11, 2016 - 10:11PM

DO NOT DUPLICATE

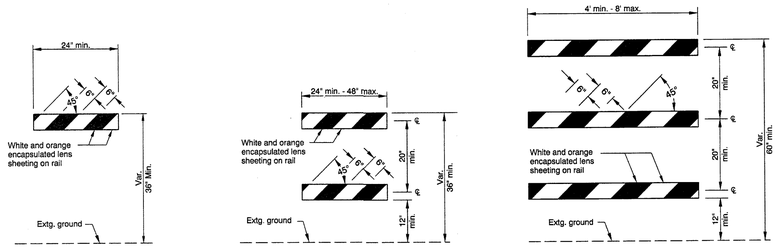

BARRICADE RAIL LAYOUT

GENERAL NOTES FOR ALL DETAILS:

- All non-reflectorized surfaces shall be white.
- Sandbags (approximately 25 lb sack filled with sand) may be placed on lower frame to provide additional ballast.
- Ballast shall not extend above bottom rail or be suspended from barricade.
- For rails less than 36" long, 4" wide stripes shall be used.
- Rails must be 8" min. to 12" max. in height.
- Use barricades from ODOT Qualified Products List (QPL).
- Use 4' Type III barricades where horizontal space is limited.
- Do not block bike lanes or shoulders unless the facility is properly closed and signed.
- Do not place barricades in sidewalks unless sidewalk is closed and signed according to the TCP. See Dwg. No. TM 844

NOTES:

- Markings for barricade rails shall slope downward at an angle of 45° in the direction traffic is to pass.
- Where a barricade extends entirely across a roadway, it is desirable that the stripes slope downward in the direction toward which traffic must turn in detouring.
- Where both right and left turns are provided for, slope the chevron striping downward in both directions from the center of the barricade.
- For full roadway closures, the C or LR barricade may be used. Extend barricades completely across roadway unless access is required for local road users.

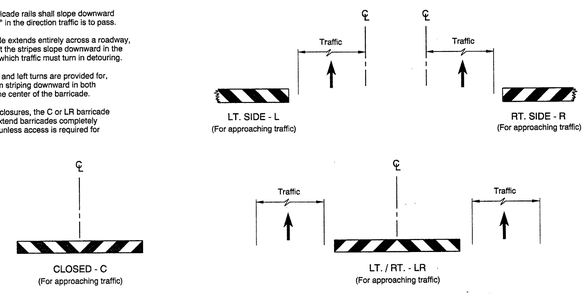

DIAGRAM FOR BARRICADE PLACEMENT AND SLOPE MARKING

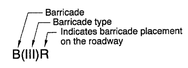

BARRICADE NOTATION

CALC. BOOK NO. N/A	BASELINE REPORT DATE 01-JAN-2015
The selection and use of this Standard Drawing, while designed in accordance with generally accepted engineering principles and practices, is the sole responsibility of the user and should not be used without consulting a Registered Professional Engineer.	NOTE: All material and workmanship shall be in accordance with the current Oregon Standard Specifications OREGON STANDARD DRAWINGS TEMPORARY BARRICADES 2015

DATE	REVISION DESCRIPTION
01-01-2015	REVISED DRAWING AND NOTES

Effective Date: June 1, 2016 - November 30, 2016

TM820

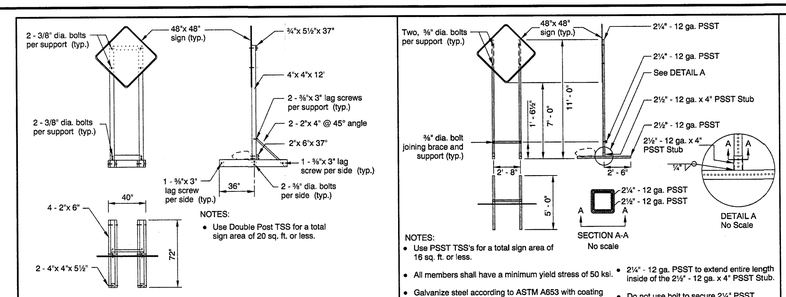

DOUBLE POST
TEMPORARY SIGN SUPPORT (TSS)

NOTES:

- Use Double Post TSS for a total sign area of 20 sq. ft. or less.

PERFORATED STEEL SQUARE TUBE (PSST)
TEMPORARY SIGN SUPPORT (TSS)

NOTES:

- Use PSST TSS's for a total sign area of 16 sq. ft. or less.
- All members shall have a minimum yield stress of 50 ksi.
- Galvanize steel according to ASTM A653 with coating designation G90. Remove Galvanizing from steel before welding. Repair Galvanizing according to ASTM A780.
- Use A325 Bolts or equivalent.
- 2¼" - 12 ga. PSST to extend entire length inside of the 2½" - 12 ga. x 4" PSST Stub.
- Do not use bolt to secure 2¼" PSST inside of the 2½" - 12 ga. x 4" PSST Stub.
- Weld steel according to AWS D.1.1.

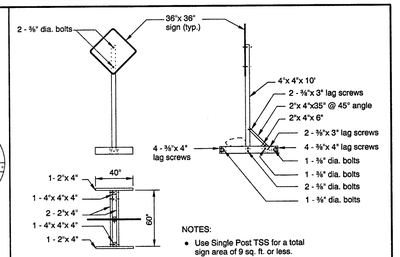

SINGLE POST
TEMPORARY SIGN SUPPORT (TSS)

NOTES:

- Use Single Post TSS for a total sign area of 9 sq. ft. or less.

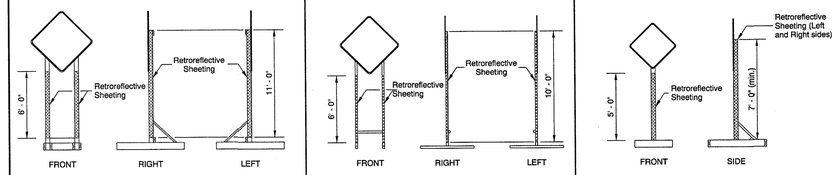

DOUBLE POST
TEMPORARY SIGN SUPPORT (TSS)

PERFORATED STEEL SQUARE TUBE (PSST)
TEMPORARY SIGN SUPPORT (TSS)

SINGLE POST
TEMPORARY SIGN SUPPORT (TSS)

TEMPORARY SIGN SUPPORT GENERAL NOTES:

- DO NOT TIP OVER TSS AT ANY TIME.
- For wooden TSS's, use either Douglas Fir or Hem Fir, which is surfaced four sides (S4S) and free of heart center (FOHC).
- See "Temporary Sign Placement" detail on TM822 for sign installation heights.
- Do not place or stack ballast more than 24" above the ground.
- When sign is inconsistent with current work zone conditions, cover sign; or turn sign 90 degrees away from approaching traffic. Remove TSS from roadway when signing is not needed for more than 3 days.
- Place a minimum of 50 lbs of sandbags on each of the four TSS supports legs. (25 lb. max per bag) (min. 100 lbs per side of each TSS)

NOTES:

- Apply flourescent orange, ANSI Type VIII or IX retroreflective sheeting to TSS posts, as shown, for all temporary signs, except "STOP" and "DO NOT ENTER". For "STOP" and "DO NOT ENTER" signs, used red ANSI Type III or IV retroreflective sheeting on the TSS posts.
- Apply sign post retroreflectivity to each TSS post facing front; and to the left and right sides of the TSS, as shown.
- Sheeting may be applied directly to post material; or applied to a rigid, lightweight substrate, then securely attached to the posts.

SIGN POST REFLECTIVE SHEETING PLACEMENT

CALC. BOOK NO. N/A	BASELINE REPORT DATE 01-JAN-2016
The selection and use of this Standard Drawing, while designed in accordance with generally accepted engineering principles and practices, is the sole responsibility of the user and should not be used without consulting a Registered Professional Engineer.	NOTE: All material and workmanship shall be in accordance with the current Oregon Standard Specifications OREGON STANDARD DRAWINGS TEMPORARY SIGN SUPPORTS 2015

DATE	REVISION DESCRIPTION
07-01-2015	REVISED NOTES
01-01-2016	REVISED NOTES AND DRAWING

Effective Date: June 1, 2016 - November 30, 2016

TM821

NOTE:

- Avoid locating sign supports in areas designated for bicycle or pedestrian traffic. When TSS or post mounted signs are located adjacent to or on a sidewalk or bicycle facility, install secondary sign (rider) at a minimum height of 7'-0" from top of sidewalk or bicycle facility to bottom of rider.

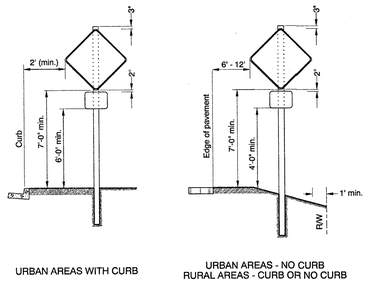

URBAN AREAS WITH CURB

URBAN AREAS - NO CURB
RURAL AREAS - CURB OR NO CURB

TEMPORARY SIGN PLACEMENT

CALC. BOOK NO. N/A	BASELINE REPORT DATE 01-JAN-2016
The selection and use of this Standard Drawing, while designed in accordance with generally accepted engineering principles and practices, is the sole responsibility of the user and should not be used without consulting a Registered Professional Engineer.	NOTE: All material and workmanship shall be in accordance with the current Oregon Standard Specifications OREGON STANDARD DRAWINGS TEMPORARY SIGN SUPPORTS 2015

DATE	REVISION DESCRIPTION

Effective Date: June 1, 2016 - November 30, 2016

TM822

GENERAL NOTES:

1. THE SIGNAGE SHOWN IS THE EXPECTED MINIMUM SIGNAGE REQUIRED. CONTRACTOR TO MODIFY AS REQUIRED.
2. LOCATIONS OF TRAFFIC CONTROL DEVICES SHOWN ARE APPROXIMATE. CONTRACTOR TO LOCATE THE TRAFFIC CONTROL DEVICES PER FIELD CONDITIONS.
3. CONTRACTOR IS RESPONSIBLE FOR MONITORING TRAFFIC CONTROL DEVICES THROUGHOUT THE DAY AND IS TO MODIFY AS REQUIRED FOR SAFETY AND MAINTAINING ACCESS.

CALL BEFORE YOU DIG !
ONE CALL· (800) 332-2344
OAR 952-001-0010 THROUGH
OAR 952-001-0090

REGISTERED PROFESSIONAL ENGINEER 58073PE OREGON JULY 13, 2004 ALEX M. PALM

EXPIRES: 12/31/2016

Rev.	Date	Dwg	Description

i.e. ENGINEERING
809 SE Pine Street
Roseburg, Oregon 97470
PHONE (541) 673-0166
FAX (541) 440-9392
iemail@ieengineering.com

Project Name: SPRUCE ST. – PARROTT ST. IMPROVEMENTS

Title: TRAFFIC CONTROL DETAILS

DES	AMP	PROJECT NO. 149-189	
DWG	LAUB	DATE: NOVEMBER 13, 2015	
CHK	AMP	SCALE: NONE	
APP	AMP	SHEET: TC.4	

DO NOT DUPLICATE

Z:\JOBS\0149-City of Roseburg\149-189 Spruce-Parrott Improvements\CADD\CONSTRUCTION\149-189_C-TRAFFIC CONTROL.dwg
Apr 11, 2016
JohnL

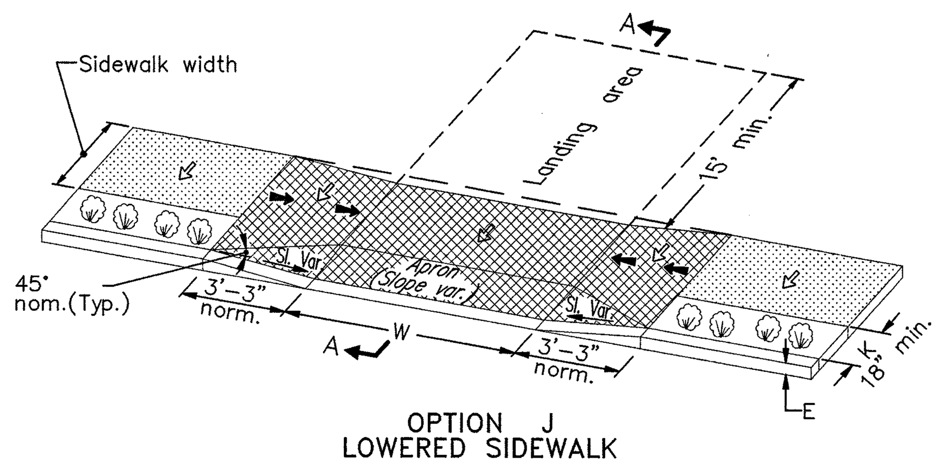

OPTION J
LOWERED SIDEWALK

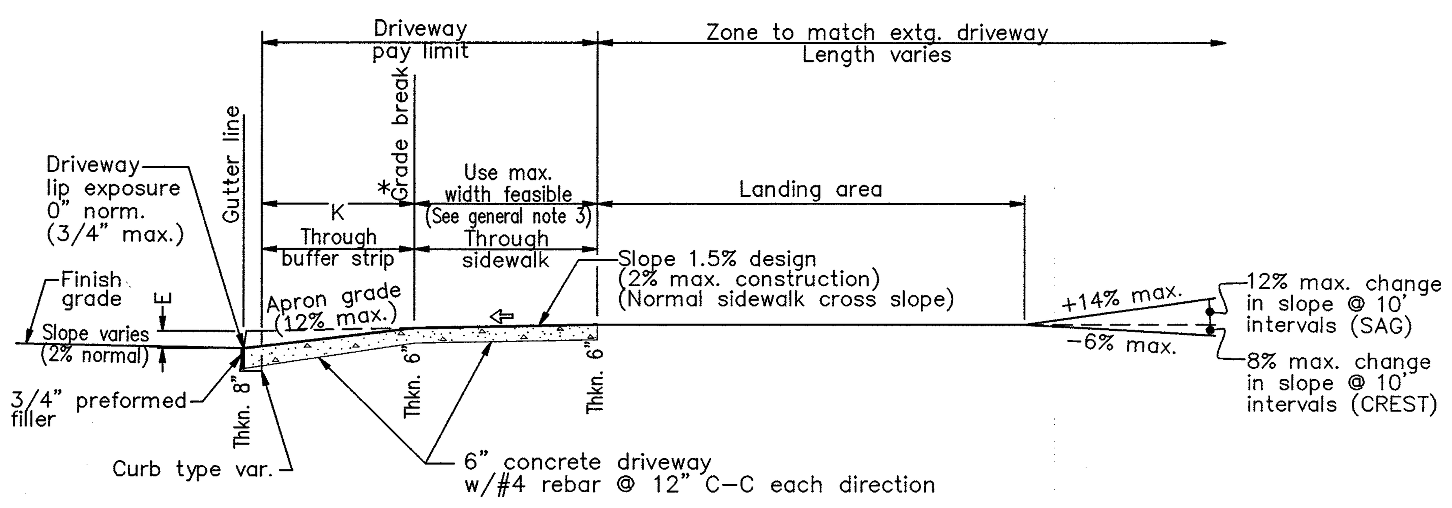

SECTION A-A

Symbol	Legend
(shading)	Sidewalk
(crosshatch)	Driveway pay limit
⇦	Slope 1.5% design (2% max. construction) (Normal sidewalk cross slope)
⬅	Slope 7.5% design (8.3% max. construction) (Ramp length 15' max.)
W	Width of driveway
K	Buffer strip width
E	Curb exposure

GENERAL NOTES FOR ALL DETAILS:
1. Details are based on United States Access Board Standards.
2. Only use details allowed by jurisdiction.
3. 4' unobstructed clear passage with slope of 1.5% design (2% max. construction) is required behind driveway apron.
4. Tooled joints are required at all driveway slope break lines.

SEPARATED SIDWALK DRIVEWAYS OR ALLEYS (OPTIONS J) LOCAL JURISDICTIONS NTS

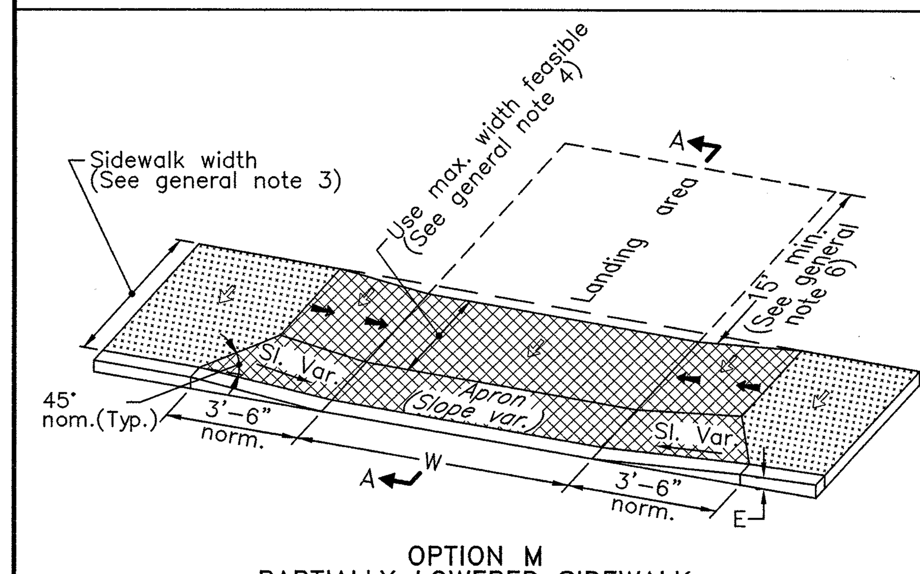

OPTION M
PARTIALLY LOWERED SIDEWALK

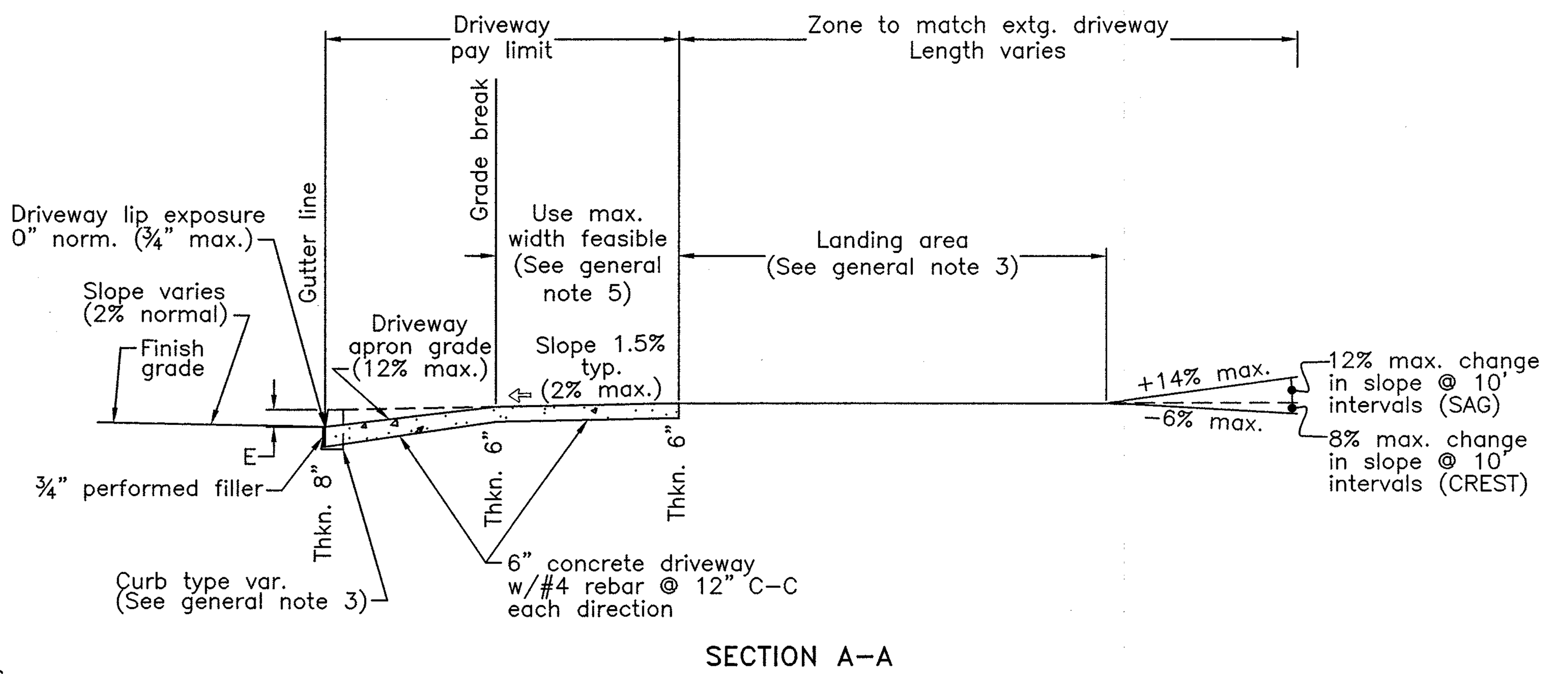

SECTION A-A

GENERAL NOTES FOR ALL DETAILS:
1. Details are based on United States Access Board Standards.
2. The following dimensions are as shown on plans, or as directed: driveway width, sidewalk width, curb exposure, ¾" driveway lip exposure.
3. Curb, gutter, and sidewalk types varies, see plans.
4. 4' unobstructed clear passage with slope of 2% max. is required behind driveway apron.
5. Tooled joints are required at all driveway slope break lines.
6. 15' min. of the driveway behind the sidewalk should be surfaced to prevent tracking of gravel onto the sidewalk.
7. Monolithic curb & sidewalk shall retain thickened edge through lowered profile, to accommodate driveway use. See plans.

Symbol	Legend
(shading)	Sidewalk
(crosshatch)	Driveway pay limit
⇦	Slope 1.5% design (2% max. construction) (Normal sidewalk cross slope)
⬅	Slope 7.5% design (8.3% max. construction) (Ramp length 15' max.)
W	Width of driveway
E	Curb exposure

CURB LINE SIDEWALK DRIVEWAYS OR ALLEYS (OPTIONS M) LOCAL JURISDICTIONS NTS

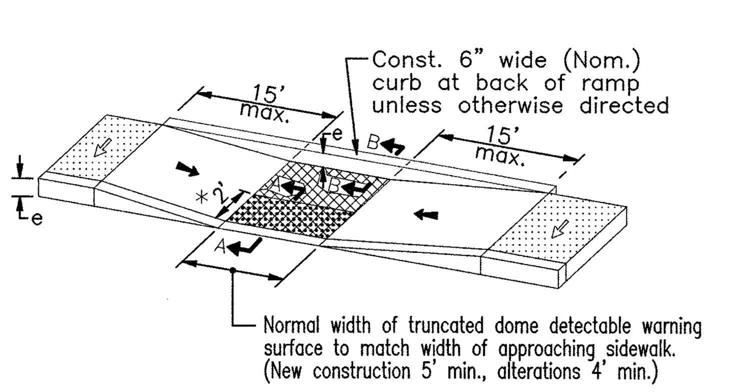

PARALLEL SIDEWALK RAMP DETAIL

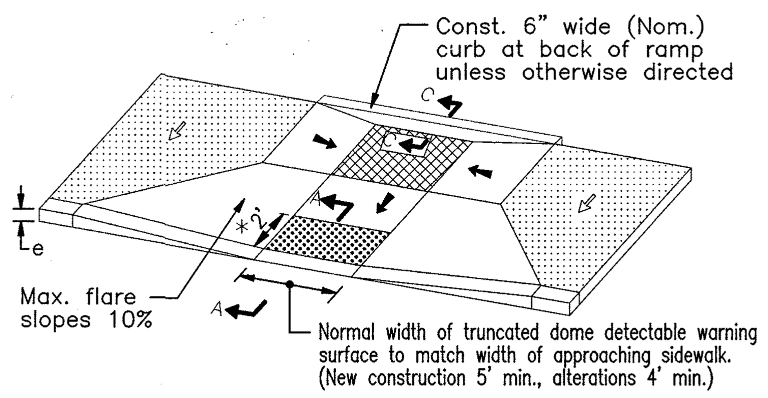

COMBINATION SIDEWALK RAMP DETAIL

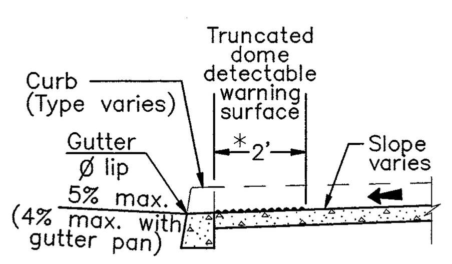

SECTION A-A

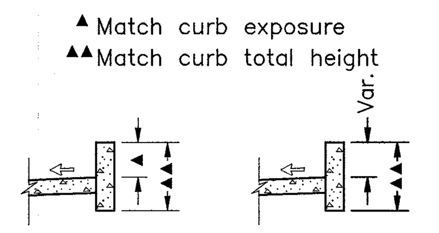

SECTION B-B SECTION C-C

GENERAL NOTES FOR ALL DETAILS:
1. Tooled joints are required at all sidewalk ramp slope break lines.
2. Sidewalk curb ramp slopes shown are relative to the true level horizon (Zero bubble).
3. Place truncated dome detectable warning surface in the lower 2' adjacent to traffic of throat of ramp only. For details not shown, see Std. Drg. RD759.
4. Side flares that are not part of the path of travel may be any slope.

Symbol	Legend
(shading)	Sidewalk
(crosshatch)	Turning space Min. level area 4' x 4' 4' x 5' when constrained (with longer dimension in direction of ramp travel). For the purposes of this application, a 2% maximum construction slope (for drainage) is considered level.
(dots)	Truncated dome detectable warning surface
⇦	Slope 1.5% design (2% max. construction) (Normal sidewalk cross slope)
⬅	Slope 7.5% design (8.3% max. construction) (Ramp length 15' max.)
*2'	See general note 3

SIDEWALK RAMP DETAILS NTS

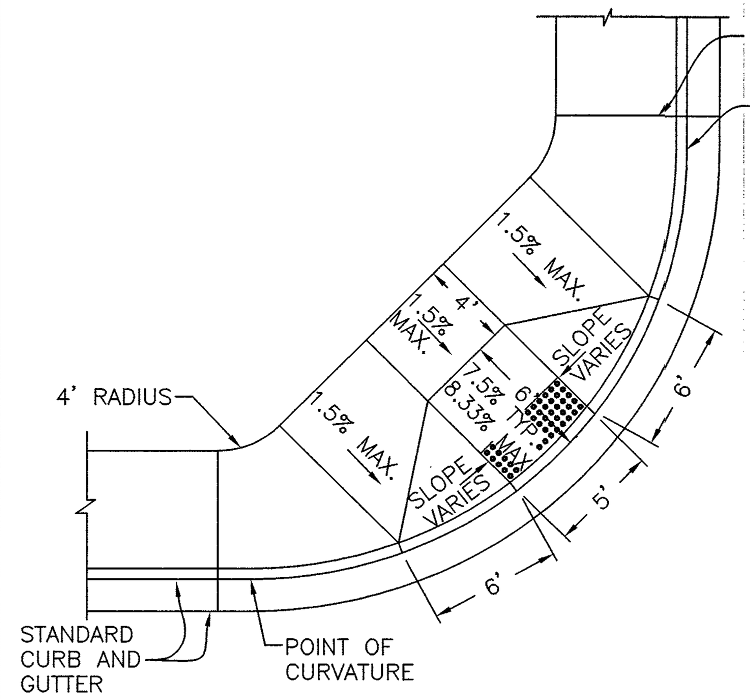

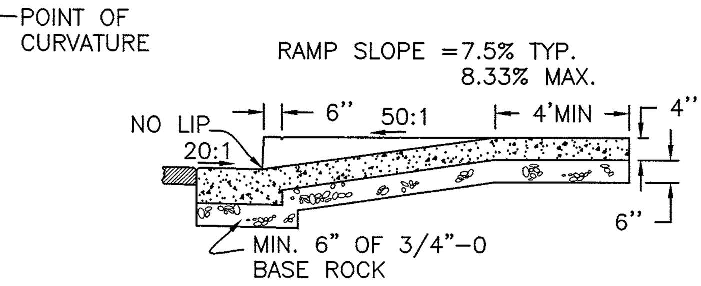

TYPICAL SECTION THROUGH COMBINED CURB RAMP

NOTES:
1. THE "AMERICANS WITH DISABILITIES ACT" (ADA) REQUIRES THAT ACCESS RAMPS TO SIDEWALKS CONFORM TO ALL FEDERAL GUIDELINES. EXCEPTIONS TO THE REQUIREMENTS IN THIS DRAWING MUST BE APPROVED BY THE ENGINEER AND MUST COMPLY WITH ADA.
2. NO ABOVE GROUND UTILITIES ARE PERMITTED WITHIN RAMP AREA.
3. LANDINGS SHALL BE PLACED AT THE TOP OF EACH RAMP. LANDING SLOPES SHALL NOT EXCEED 50:1 IN ANY DIRECTION. THE SLOPE OF THE SURFACING AT THE BOTTOM OF THE RAMP SHALL NOT EXCEED 20:1 FOR A DISTANCE OF 2'.
4. MINIMUM LANDING DIMENSIONS SHALL BE 4'x4'.
5. PLACE TRUNCATED DOME DETECTABLE WARNING TEXTURE IN THE LOWER 2' OF THROAT OF RAMP ONLY. ARRANGE DOMES USING IN-LINE PATTERN AS SHOWN IN DETAIL. COLOR OF TEXTURE TO BE YELLOW.
6. CONCRETE STRENGTH SHALL BE 3300 PSI.

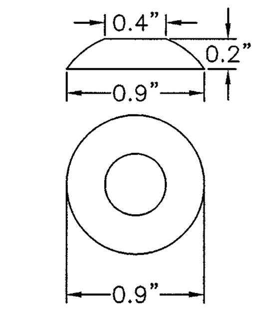

TRUNCATED DOME DETAIL

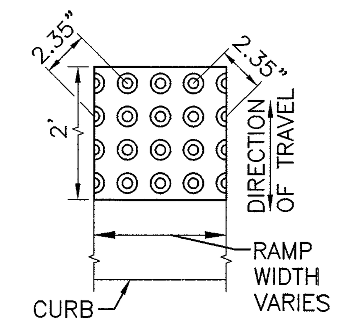

RAMP TEXTURE PATTERN DETAIL

SIDEWALK ACCESS RAMP
SINGLE CORNER RAMP

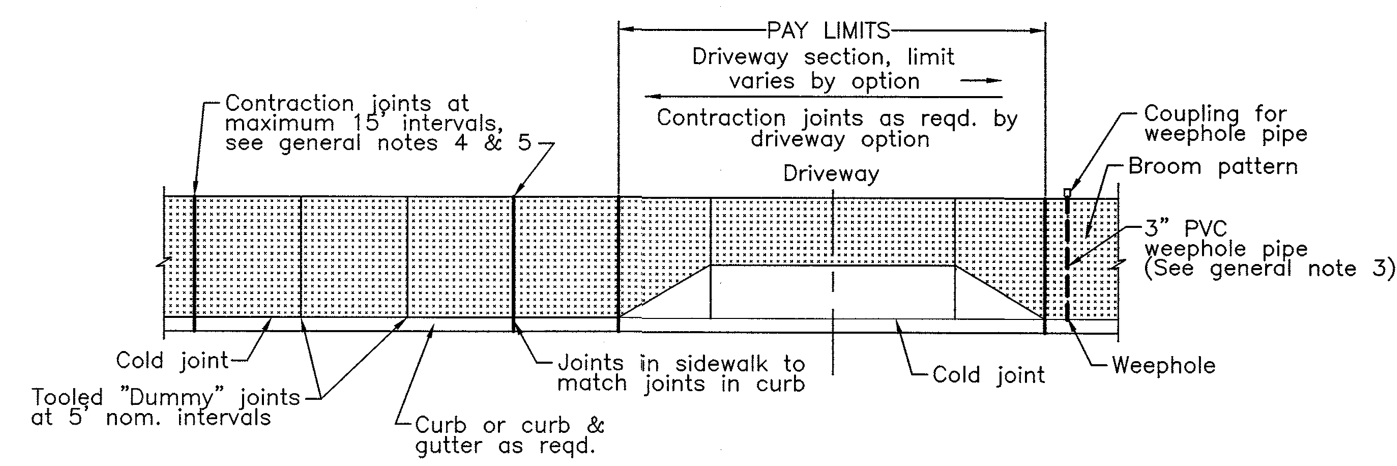

TYPICAL PLAN VIEW – CURB LINE SIDEWALK

GENERAL NOTES FOR ALL DETAILS:
1. Include additional paved or unpaved 2' clearance to vertical faces higher than 5' such as retaining walls, sound walls, fences and buildings.
2. Curb type and sidewalk width as shown on plans or as directed. On sidewalks 8' and wider, provide a longitudinal joint at the midpoint.
3. Install 3" pvc weephole pipes in sidewalks where shown on plans, and allowed by jurisdiction. Place contraction joint over top of pipe.
4. Const. expansion joints at 200' maximum spacing, and at points of tangency, and at ends of each driveway. For monolithic curb & sidewalk, const. expansion joints at 45° maximum spacing.
5. Const. contraction joints at 5' maximum spacing, and at ends of each driveway and ramp.
6. For curb details, see curb details above.
7. Sidewalk details are based on United States Access Board Standards.

SIDEWALK DETAILS NTS

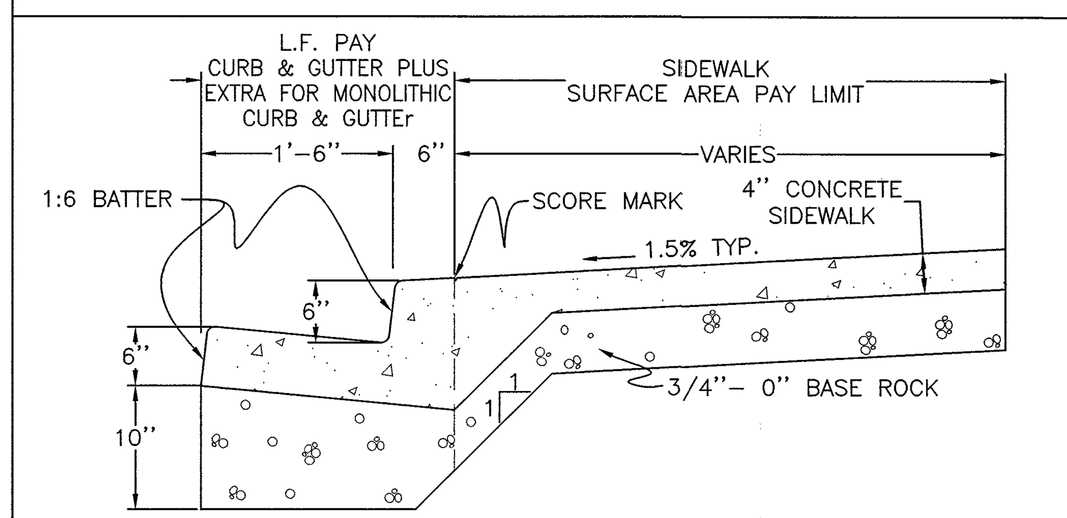

NOTES:
1. ALL RADII SHALL BE 3/4" (20mm) UNLESS OTHERWISE SHOWN.
2. ISOLATION JOINTS (FELT EXPANSION JOINTS) SHALL BE PLACED AT 45' INTERVALS AND AT DRIVEWAYS.
3. CONTRACTION JOINTS SHALL BE PLACED AT 5' INTERVALS AND SHALL EXTEND THROUGH THE CURB OR CURB & GUTTER EVERY OTHER ONE.
4. BROOM PATTERN FINISH.

MONOLITHIC CURB, GUTTER AND SIDEWALK NTS

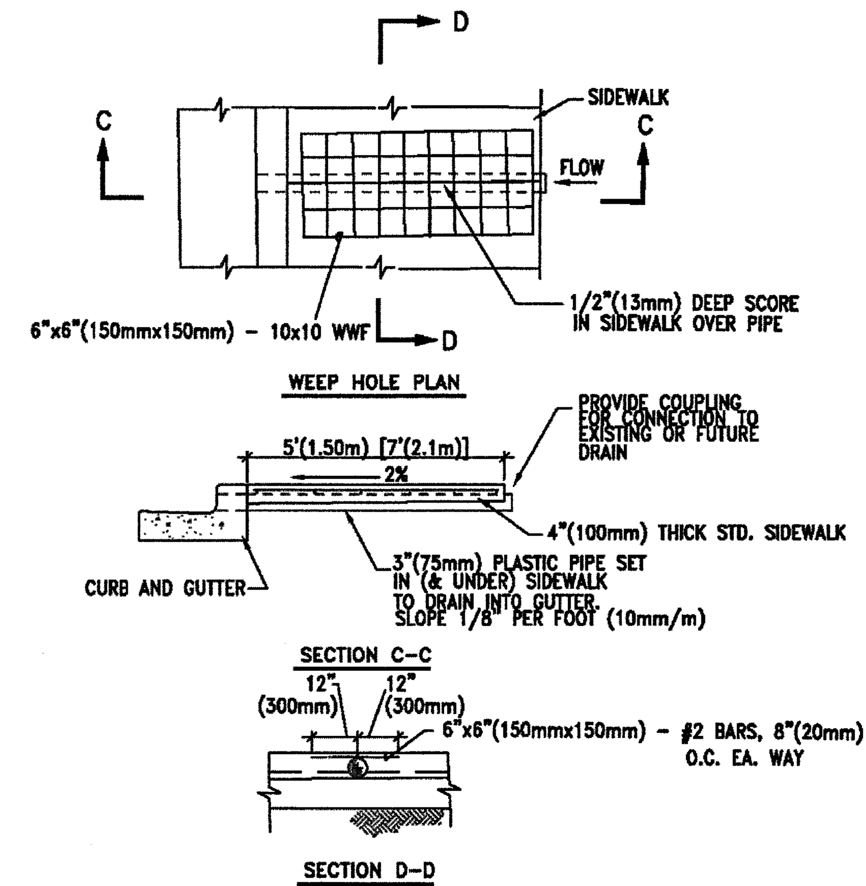

TYP. WEEP HOLE DETAIL
N.T.S.

CITY OF ROSEBURG PUBLIC WORKS DEPARTMENT CHRIS S. BERQUIST, DIRECTOR		DATE: 7/16/94	SCALE: NTS
STANDARD DRAWING	No. PW-007	BY: RLP	CHK: RLP
CURB & GUTTER WEEPHOLE		DRWN: RLP	REV: 4/6/95
		APPRVD: CSB	REV:
		PROJECT No: N/A	REV:

DEPARTMENT OF PUBLIC WORKS ROSEBURG

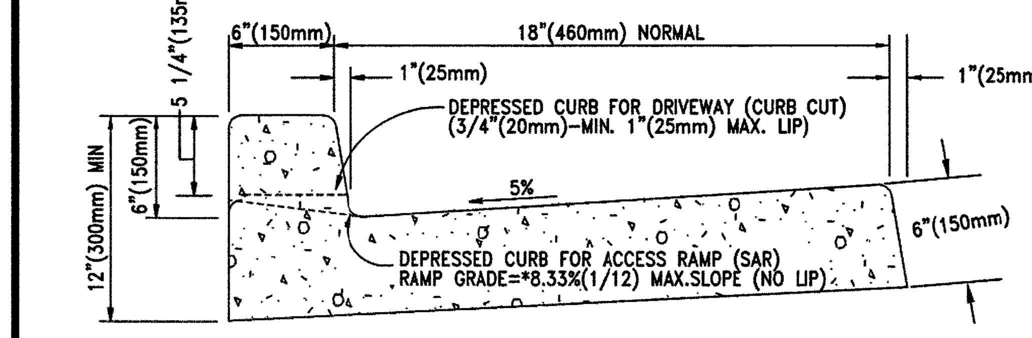

*8.33% (1:12) MAXIMUM SLOPE ALLOWED BY AMERICANS WITH DISABILITIES ACT (ADA)

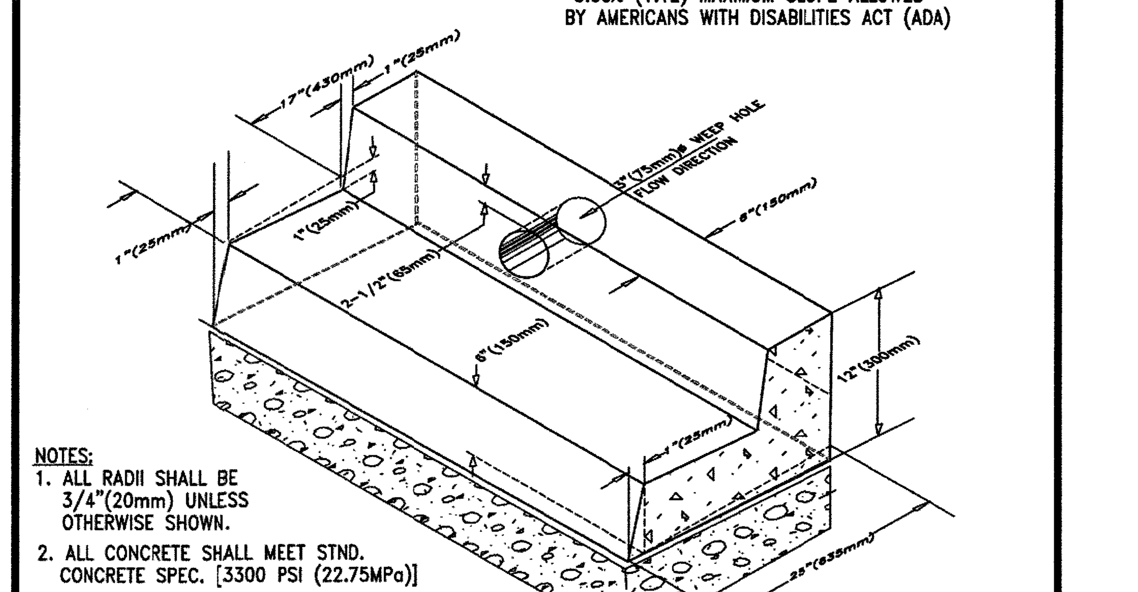

NOTES:
1. ALL RADII SHALL BE 3/4"(20mm) UNLESS OTHERWISE SHOWN.
2. ALL CONCRETE SHALL MEET STND. CONCRETE SPEC. [3300 PSI (22.75MPa)]
3. ALLOWABLE TOLERANCE FOR DEVIATION FROM TANGENT OR STRAIGHT LINES IN NON-CURVED SECTIONS, SHALL NOT EXCEED 2mm/1m (1/4"PER 12') [WHEN A 2 meter STRAIGHT EDGE IS LAID UPON ANY SURFACE NOT IN A CURVE OR A GRADE CHANGE THE MAXIMUM GAP SHALL BE 4mm.]

CITY OF ROSEBURG PUBLIC WORKS DEPARTMENT CHRIS S. BERQUIST, DIRECTOR		DATE: 6/24/94	SCALE: NTS
STANDARD DRAWING	No. PW-004	BY: NAJ	CHK: RLP
MONOLITHIC CURB & GUTTER		DRWN: RLP	REV: 9/11/95
		APPRVD: CSB	REV: 2/05/04
		PROJECT No: N/A	REV:

DEPARTMENT OF PUBLIC WORKS ROSEBURG

CALL BEFORE YOU DIG ! ONE CALL: (800) 332-2344
OAR 952-001-0010 THROUGH OAR 952-001-0090

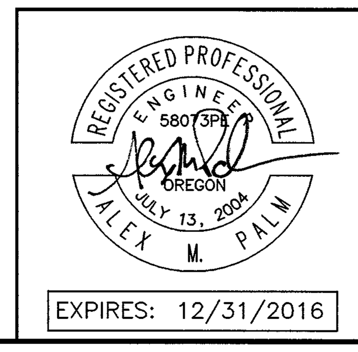

EXPIRES: 12/31/2016

Rev.	Date	Dwg	Description

i.e. ENGINEERING
809 SE Pine Street
Roseburg, Oregon 97470
PHONE (541) 673-0166
FAX (541) 440-9392
iemail@ieengineering.com

Project Name: SPRUCE ST. – PARROTT ST. IMPROVEMENTS
Title: STANDARD DETAILS

DES AMP	PROJECT NO. 149-189
DWG LAUB	DATE: NOVEMBER 13, 2015
CHK AMP	SCALE: NONE
APP AMP	SHEET: SD.1

DO NOT DUPLICATE

Z:\JOBS\0149-City of Roseburg\149-189 Spruce-Parrott Improvements\CADD\CONSTRUCTION\149-189_C-DETAILS.dwg Apr 11, 2016 JohnL

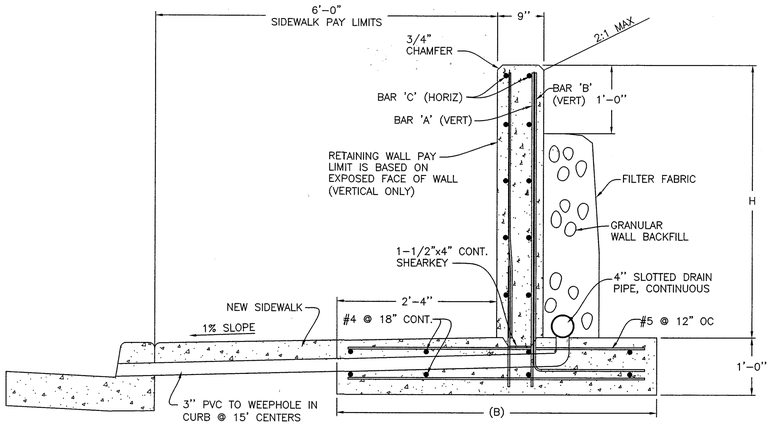

TYPICAL RETAINING WALL

H	B	BAR 'A'	BAR 'B'	BAR 'C'
2'-4'	3'-9"		#4 @ 18"CC	#4 @ 18"CC
>4'-6'	4'-6"	#5 @ 24"CC	#4 @ 12"CC	#5 @ 18"CC

NOTE:
GRANULAR WALL BACKFILL TO MEET THE REQUIREMENTS OF SECTION 02630.11

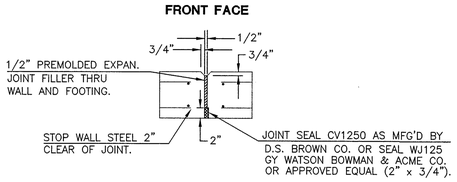

EXPANSION JOINT

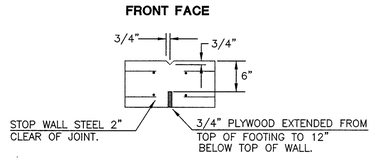

CONTRACTION JOINT

WALL NOTES:

1. ALL CONCRETE SHALL BE 3300 P.S.I. AT 28 DAYS WITH 1" OR 1 1/2" AGGREGATE.
2. ALL BARS SHALL CONFORM TO ASTM SPECIFICATION A615 GRADE 60.
3. NO. 4 LONGITUDINAL BARS AND NO. 4 VERTICAL BARS IN FRONT FACE OF WALL SHALL BE LAPPED 1'- 4" AT ALL SPLICES. NO SPLICES SHALL BE PERMITTED IN BACK FACE OF WALL.
4. ALL BARS SHALL BE PLACED 3" CLEAR OF THE NEAREST FACE OF CONCRETE UNLESS NOTED OR SHOWN OTHERWISE.
5. PLACE EXPANSION JOINTS THRU WALL AND FOOTING AND CONTRACTION JOINTS IN WALL ONLY.
6. PLACE EXPANSION JOINTS AT APPROXIMATELY 96' CENTERS AND CONTRACTION JOINTS AT APPROXIMATELY 15' CENTERS AND CHANGES IN WALL HEIGHT.

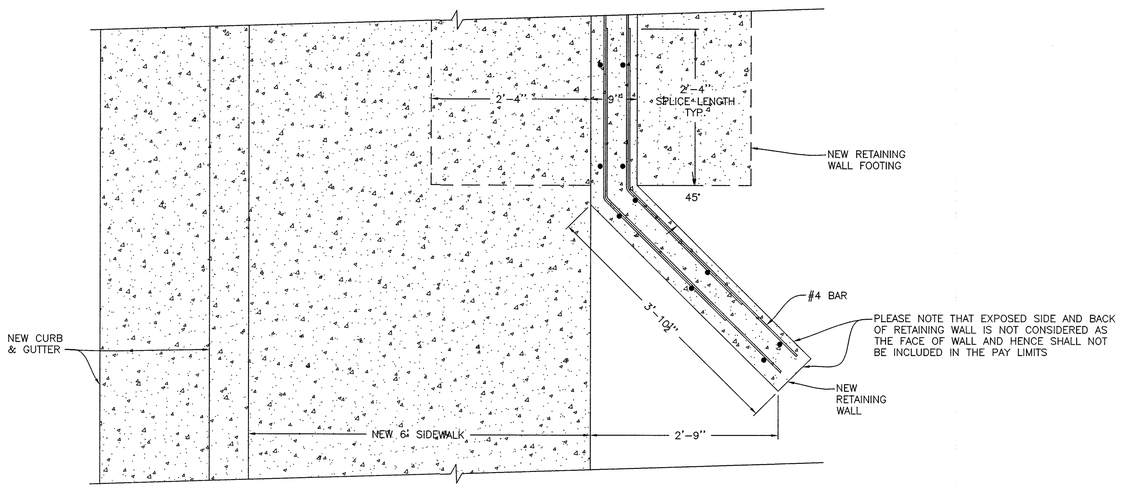

WALL END TERMINAL DETAIL

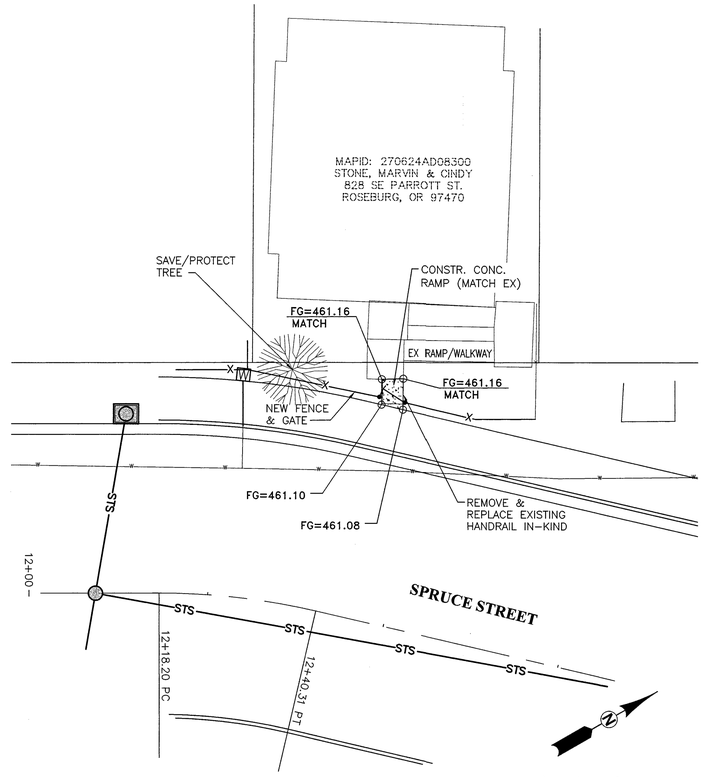

CONCRETE RAMP DETAIL

SCALE: 1" = 10'

0' 5' 10' 20'
SCALE:1" = 10'

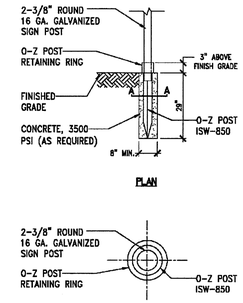

TYPICAL SIGN POST SUPPORT INSTALLATION			
DES:	CITY OF ROSEBURG PUBLIC WORKS		SCALE: NTS
DWN:			DATE:
APR:	REV:	DATE:	SHT. 2-27

CALL BEFORE YOU DIG !
ONE CALL: (800) 332-2344
OAR 952-001-0010 THROUGH
OAR 952-001-0090

REGISTERED PROFESSIONAL ENGINEER
58073PE
OREGON
JULY 13, 2004
ALEX M. PALM
EXPIRES: 12/31/2016

Rev.	Date	Dwg	Description

i.e. ENGINEERING
809 SE Pine Street
Roseburg, Oregon 97470
PHONE (541) 673-0166
FAX (541) 440-9392
iemail@ieengineering.com

Project Name:
SPRUCE ST. - PARROTT ST. IMPROVEMENTS

Title:
RETAINING WALL STANDARD DETAILS

DES	AMP	PROJECT NO.	149-189
DWG	LAUB	DATE:	NOVEMBER 13, 2015
CHK	AMP	SCALE:	NONE
APP	AMP	SHEET:	SD.2

Z:\JOBS\0149-City of Roseburg\149-189 Spruce-Parrott Improvements\CADD\CONSTRUCTION\149-189_2-DETAILS.dwg
JohnL Apr 11, 2016

DO NOT DUPLICATE

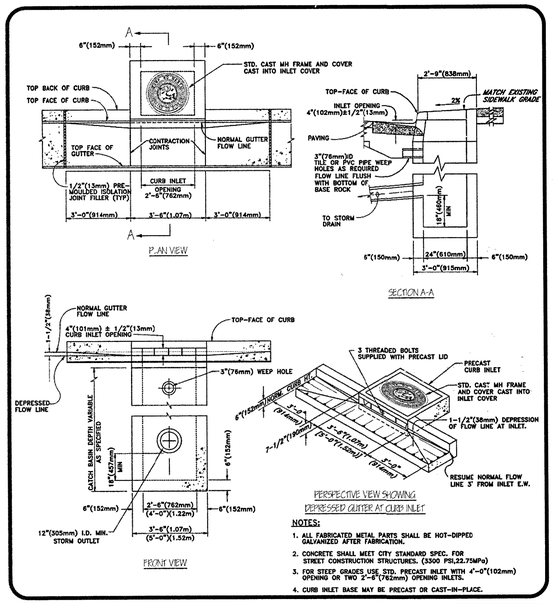

NOTES:

1. ALL FABRICATED METAL PARTS SHALL BE HOT-DIPPED GALVANIZED AFTER FABRICATION.
2. CONCRETE SHALL MEET CITY STANDARD SPEC. FOR STREET CONSTRUCTION STRUCTURES. (3300 PSI,22.75MPa)
3. FOR STEEP GRADES USE STD. PRECAST INLET WITH 4'-0"(102mm) OPENING OR TWO 2'-6"(762mm) OPENING INLETS.
4. CURB INLET BASE MAY BE PRECAST OR CAST-IN-PLACE.

CITY OF ROSEBURG PUBLIC WORKS DEPARTMENT CHRIS S. BERQUIST, DIRECTOR		DATE:	SCALE: NTS
		BY: RLP	CHK:
STANDARD DRAWING	No. PW-011	DRWN: RLP	REV: 2/28/95
PRE-CAST STORM DRAIN CURB INLET		APPRVD: CSB	REV: 8/22/03
		PROJECT No: N/A	REV:

DEPARTMENT OF PUBLIC WORKS — ROSEBURG, OREGON

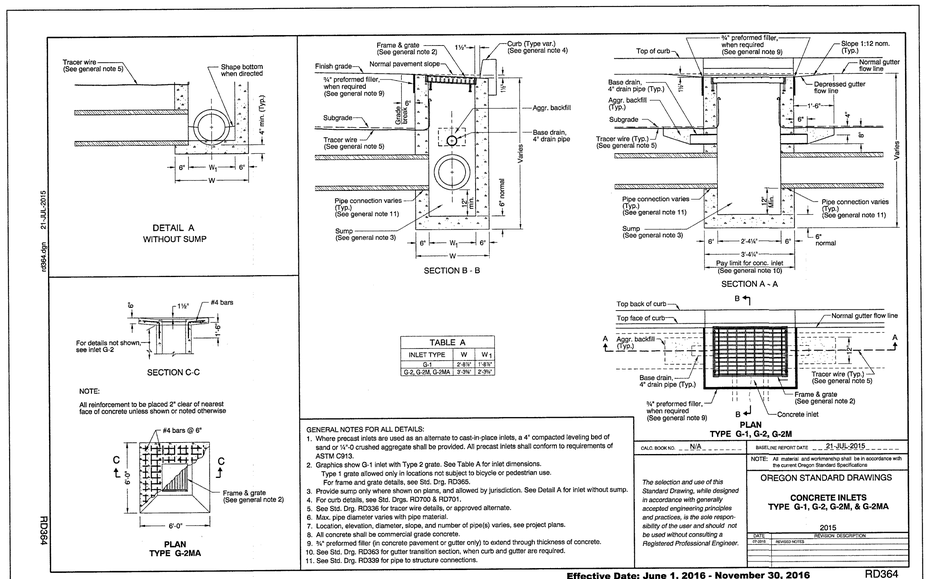

INLET TYPE	W	W_1
G-1	2'-6¼"	1'-6¾"
G-2, G-2M, G-2MA	3'-3¾"	2'-3¾"

NOTE:
All reinforcement to be placed 2" clear of nearest face of concrete unless shown or noted otherwise

GENERAL NOTES FOR ALL DETAILS:

1. Where precast inlets are used as an alternate to cast-in-place inlets, a 4" compacted leveling bed of sand or ¼"-0 crushed aggregate shall be provided. All precast inlets shall conform to requirements of ASTM C913.
2. Graphics show G-1 inlet with Type 2 grate. See Table A for inlet dimensions.
   Type 1 grate allowed only in locations not subject to bicycle or pedestrian use.
   For frame and grate details, see Std. Drg. RD365.
3. Provide sump only where shown on plans, and allowed by jurisdiction. See Detail A for inlet without sump.
4. For curb details, see Std. Drgs. RD700 & RD701.
5. See Std. Drg. RD336 for tracer wire details, or approved alternate.
6. Max. pipe diameter varies with pipe material.
7. Location, elevation, diameter, slope, and number of pipe(s) varies, see project plans.
8. All concrete shall be commercial grade concrete.
9. ¾" preformed filler (in concrete pavement or gutter only) to extend through thickness of concrete.
10. See Std. Drg. RD363 for gutter transition section, when curb and gutter are required.
11. See Std. Drg. RD339 for pipe to structure connections.

CALC. BOOK NO. N/A	BASELINE REPORT DATE 21-JUL-2015
	NOTE: All material and workmanship shall be in accordance with the current Oregon Standard Specifications
The selection and use of this Standard Drawing, while designed in accordance with generally accepted engineering principles and practices, is the sole responsibility of the user and should not be used without consulting a Registered Professional Engineer.	OREGON STANDARD DRAWINGS **CONCRETE INLETS** **TYPE G-1, G-2, G-2M, & G-2MA** 2015

DATE	REVISION DESCRIPTION
21-JUL-2015	REVISED NOTES

21-JUL-2015 rd364.dgn

Effective Date: June 1, 2016 - November 30, 2016 RD364

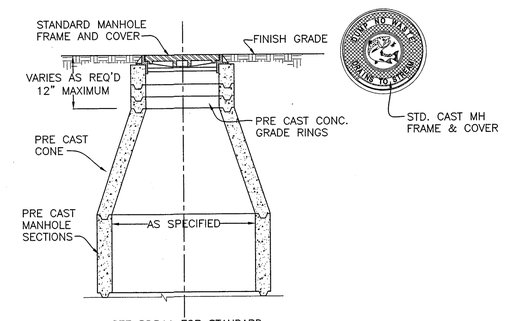

SEE RD344 FOR STANDARD MANHOLE BASE SECTION

TYPICAL STORM MANHOLE DETAIL
N.T.S.

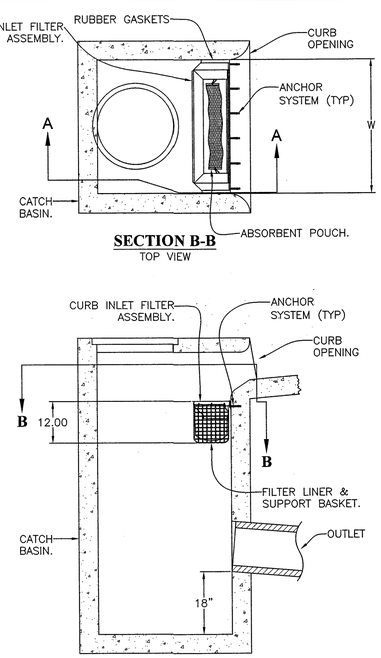

NOTES:

1. Filter inserts shall be installed across the entire width of curb opening. Storage capacity and clean flow rates are based on full width installation.
2. Filter insert shall be attached with resin bonded anchor system. All hardware to be stainless steel. Use ⅜"ø threaded rods or bolts. Min. embedment depth= 2½". Install anchor system per manufacturer's recommendation.
3. Inserts are designed with a debris trap/energy dissipator for the retention of floatable's and collected sediments.
4. Filter support frame shall be constructed from stainless steel Type 304.
5. Filter liner shall be constructed from durable polypropylene, woven, monofilament, geotextile. Filter liner shall not allow the retention of water between storm events.
6. Filter inserts are supplied with "clip-in" filter pouches for the collection and retention of petroleum hydrocarbons (oils & greases).

TYPICAL WATER QUALITY CURB INLET FILTER INSERT DETAIL
NTS

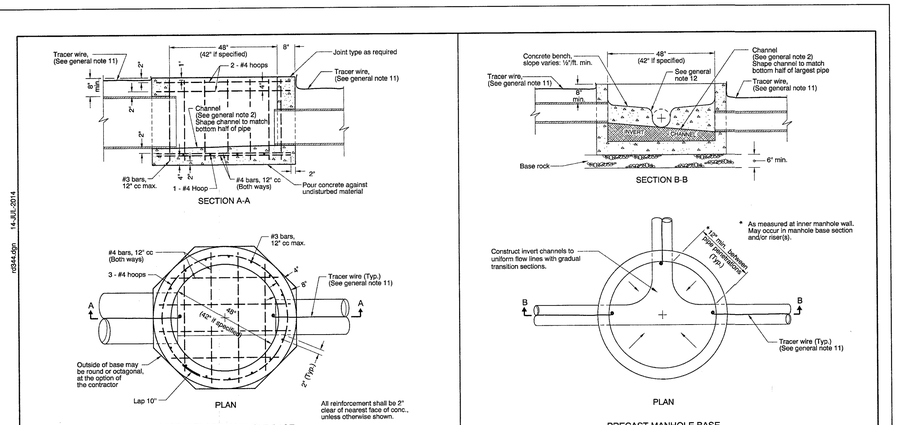

GENERAL NOTES FOR ALL DETAILS:

1. All concrete shall be commercial grade concrete.
2. Channels shall be constructed to provide smooth slopes and radii to outlet pipe.
3. Bases may be precast or cast in place.
4. Max. pipe diameter varies with pipe material.
5. Use on 42" and 48" diameter manhole.
6. Extend pipe into manhole and grout smooth.
   Pipe(s) may extend 2" max. beyond the interior manhole wall.
7. Location, elevation, diameter, slope, and number of pipe(s) varies, see project plans.
8. All precast products shall conform to the requirements of ASTM C478.
9. See Std. Drg. RD345 for pipe to manhole connections.
10. See Std. Drg. RD336 for manhole steps details.
11. See Std. Drg. RD336 for tracer wire details.
12. At spring line of pipe, extend channel up to crown line on 12:1 batter.

CALC. BOOK NO. N/A	BASELINE REPORT DATE 14-JUL-2014
	NOTE: All material and workmanship shall be in accordance with the current Oregon Standard Specifications
The selection and use of this Standard Drawing, while designed in accordance with generally accepted engineering principles and practices, is the sole responsibility of the user and should not be used without consulting a Registered Professional Engineer.	OREGON STANDARD DRAWINGS **STANDARD MANHOLE BASE SECTION** 2015

DATE	REVISION DESCRIPTION

rd344.dgn 14-JUL-2014

Effective Date: June 1, 2016 - November 30, 2016 RD344

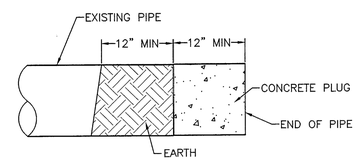

ABANDON PIPE PLUG DETAIL
NTS

CALL BEFORE YOU DIG !
ONE CALL: (800) 332-2344
OAR 952-001-0010 THROUGH
OAR 952-001-0090

REGISTERED PROFESSIONAL ENGINEER — OREGON — JULY 13, 2004 — ALEX M. PALM

EXPIRES: 12/31/2016

Rev.	Date	Dwg	Description

i.e. ENGINEERING
809 SE Pine Street
Roseburg, Oregon 97470
PHONE (541) 673-0166
FAX (541) 440-9392
iemail@ieengineering.com

Project Name:
SPRUCE ST. – PARROTT ST. IMPROVEMENTS

Title:
STORM SEWER STANDARD DETAILS

DES AMP	PROJECT NO. 149-189
DWG LAUB	DATE: NOVEMBER 13, 2015
CHK AMP	SCALE: NONE
APP AMP	SHEET: SD.3

Z:\0080\0149-City of Roseburg\149-189_Spruce-Parrott Improvements\CADD\CONSTRUCTION\149-189_C-DETAILS.dwg Apr 11, 2016 JOINL

DO NOT DUPLICATE

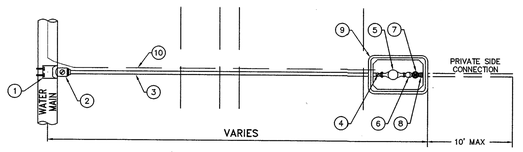

PLAN

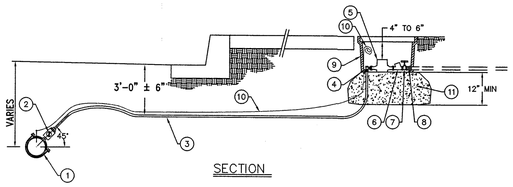

SECTION

BILL OF MATERIALS

ITEM	SIZE	DESCRIPTION	TYPE	QTY
1	AS REQ'D	SERVICE SADDLE	NYLON COATED ROMAC 1" CC X PIPE SIZE & MATERIAL	1
2	1"	CORP STOP	FORD F1001 (CC X PACK JOINT)	1
3	1"	SERVICE PIPE	200 P.S.I. POLYETHYLENE SIDR7 (PE 3408)	AS REQ'D
4	1" X 3/4"	ANGLE STOP	FORD KV63-342W (PACK JOINT)	1
5	5/8" X 3/4"	METER	EXISTING OR AS SUPPLIED BY CITY	1
6	3/4"	STRAIGHT CHECK VALVE	FORD H38-323 (METER NUT X MIPT)	1
7	3/4"	GATE VALVE	BRONZE GATE VALVE, HAND WHEELS, FIPT	1
8	N/A	COUPLER	FORD MIPT X PACK JOINT COUPLING	1
9	N/A	METER BOX	ARMORCAST P6000485 WITH COVER & READ LID	1
10	NO. 12 AWG	TONE WIRE	ELECTRICAL HMWPE STRANDED COPPER WIRE	AS REQ'D
11	N/A	ROCK	3/4" – 0" CRUSHED ROCK	AS REQ'D
12				

NOTES:

1. CONNECTIONS TO EXISTING CUSTOMER PLUMBING SHALL BE HARD PIPED OR USE PACK JOINT COUPLINGS. GLUE JOINTS WILL NOT BE PERMITTED.
2. APPROVED MANUFACTURES ARE PROVIDED IN BILL OF MATERIALS, OTHERS SHALL BE APPROVED PRIOR TO USE.
3. COIL 12 INCHES OF TONE WIRE IN METER BOX.

SINGLE 5/8" X 3/4" METER INSTALLATION ASSEMBLY

DES:	*CITY OF ROSEBURG PUBLIC WORKS*	SCALE: NTS
DWN: RGH		DATE: 4/1/14
APR:	REV: / DATE:	SHT.

STANDARD TRENCH SECTIONS FOR WATER MAINS

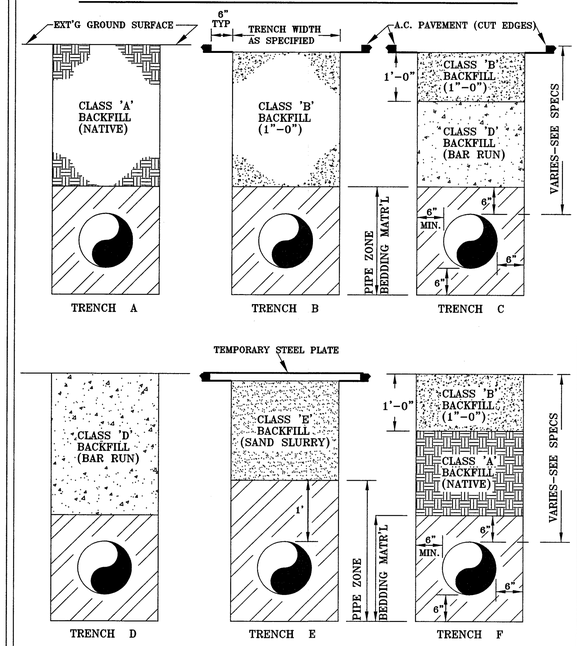

CITY OF ROSEBURG	WATER DEPARTMENT	DATE: 10/13/83 REV: 1/18/2000	STANDARD DWG. NO. 101

TYPICAL VALVE & VALVE BOX ASSEMBLY

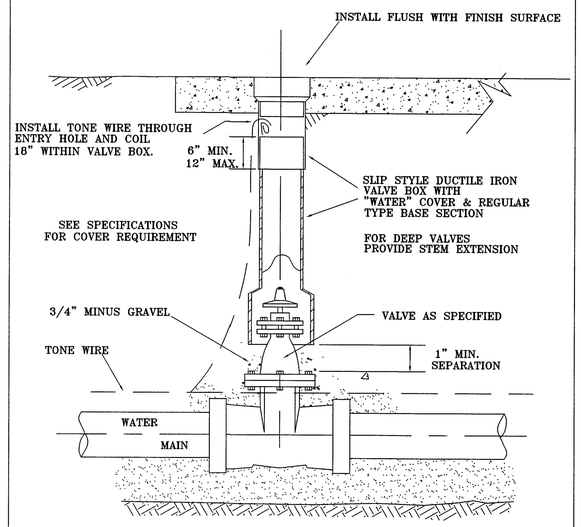

NOTE: THIS VALVE BOX SHALL BE A RICH STYLE 931 DUCTILE IRON VALVE BOX OR APPROVED EQUAL.

CITY OF ROSEBURG	WATER DEPARTMENT	DATE: 10/13/1983 REV: 4/3/2001	STANDARD DWG. NO. 103

TYPICAL FIRE HYDRANT INSTALLATION (THRUST BLOCKED)

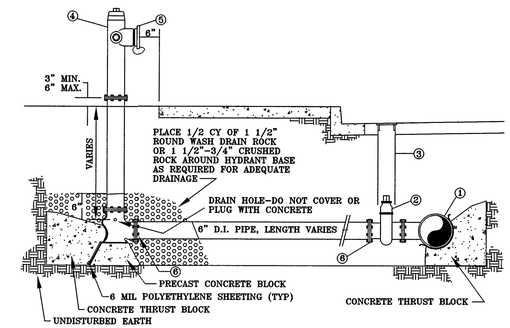

LEGEND

1. MAIN SIZE X 6" FLG. TEE
2. 6" FLG. X M.J. GATE VALVE
3. 6" VALVE BOX PIPE WITH LID
4. PRE ASSEMBLED FIRE HYDRANT
5. 5" PUMPER CONNECTION ADAPTER "STORZ" WITH CAPS
6. 6' MEGALUG ASSEMBLY KIT

CITY OF ROSEBURG	WATER DEPARTMENT	DATE: 10/13/1983 REV: 7/19/2005	STANDARD DWG. NO. 105

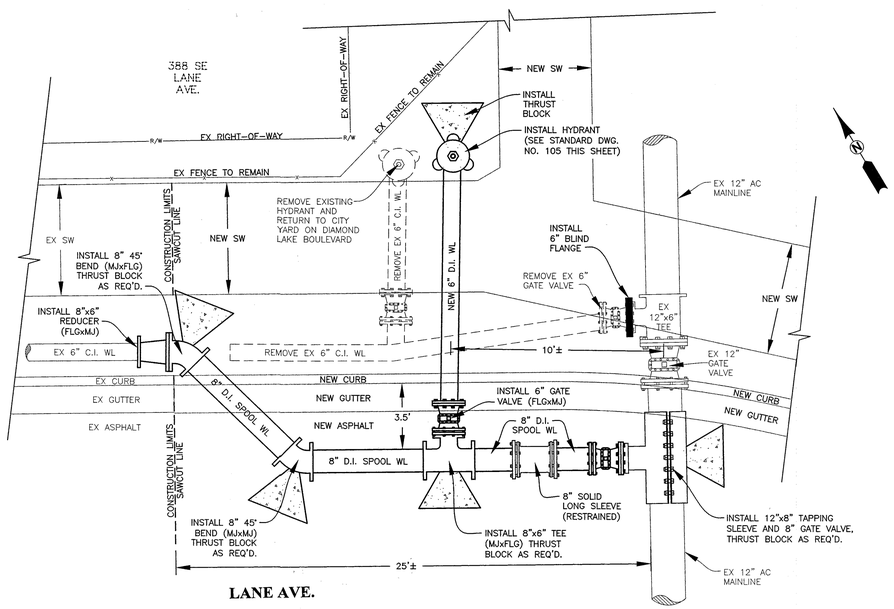

WATER TIE-IN DETAIL 'A'

N.T.S.

NOTES:

1. FIELD VERIFY ALIGNMENT, SIZE, LENGTHS, LOCATION PRIOR TO ORDERING.
2. PRIOR TO WATERLINE INSTALLATION, CONTRACTOR SHALL SUBMIT SEQUENCING PLAN TO CITY FOR APPROVAL.

THRUST BLOCKING

TABLE A

CONCRETE THRUST BLOCKING (HORIZONTAL)

PIPE DIA.	Table Pressure PSI	Thrust (T) at fittings in Pounds: A Tee & Dead Ends	B 90 deg Bend	C 45 deg Bend	D 22.5 deg Bend	E 11.25 deg Bend
4"	250	3035	4320	2315	1215	610
6"	250	6660	9735	5215	2720	1375
8"	250	12185	17310	9265	4835	2430
10"	250	19045	27045	14480	7560	3800
12"	250	27405	38940	20840	10880	5465
14"	250	37320	53010	28370	14815	7445
16"	250	48740	69245	37050	19360	9735

TABLE B

Soil Type	Soil Bearing Capacity (B) in PSF
Muck, peat, etc.	0
Soft Clay	1000
Sand	2000
Sand and gravel	3000
Sand and gravel cemented with clay	4000
Hard shale	10,000

TABLE C

CONCRETE BLOCKING FOR CONVEX VERTICAL BENDS

DIMENSION TABLE

PIPE DIA. in.	Table Pressure PSI	Bend Angle (deg)	Concrete Volume (cy)	Cube Size (ft)	Stirrup Dia. (in)	Stirrup Embmt. (in)	Stirrup Bar #
		11.25	0.21	1.8			
4"	250	22.5	0.43	2.3	⅝	17	5
		45	0.77	2.8			
		11.25	0.48	2.4			
6"	250	22.5	0.95	3.0	⅝	17	5
		45	1.79	3.6			
		11.25	0.86	2.9			
8"	250	22.5	1.65	3.5	⅝	17	5
		45	3.22	4.4			
		11.25	1.39	3.3			
10"	250	22.5	2.62	4.1	⅝	17	5
		45	4.97	4.1			
		11.25	1.94	3.7			
12"	250	22.5	3.91	4.7	⅝	17	5
		45	6.89	5.7	⅞	24	7
		11.25	2.62	4.1	⅝	17	5
14"	250	22.5	5.26	5.2	¾	20	6
		45	9.70	6.4	1	27	8
		11.25	3.44	4.5	⅝	17	5
16"	250	22.5	6.89	5.7	¾	24	7
		45	12.63	7.0	1⅛	30	9

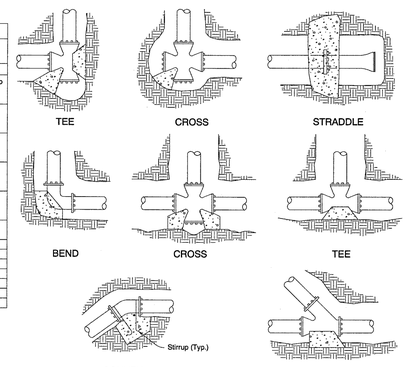

THRUST BLOCK BEARING AREA EQUATION

NOTE: WHEN THRUST BLOCK BEARING AREA IS NOT SPECIFIED ON THE PLANS OR DETERMINED BY THE ENGINEER, USE THE FOLLOWING PROCEDURE TO DETERMINE REQUIRED BEARING AREA.

1. Determine thrust (T) for type of fitting or joint and size of pipe from Table A.
2. Determine Design (Test) Pressure from Standard Specifications or Special Provisions.
3. Determine Table Pressure from Table A.
4. Determine Soil Bearing Capacity (B) of soil from Table B.
5. Determine required bearing area (A) in sq. ft. as follows:

$$\text{Thrust Block Bearing Area} = A = \left(\frac{T}{B}\right)\left(\frac{\text{Design (Test) Pressure}}{\text{Table Pressure}}\right)$$

Example: Design (Test) Pressure = 150 PSI
Pipe = 14"
Fitting = Tee
Soil = Sand

From Table A, T = 37320
From Table B, B = 2000

$$A = \left(\frac{37320}{2000}\right)\left(\frac{150}{250}\right) = 11.2 \text{ sq ft}$$

GENERAL NOTES FOR ALL DETAILS:

1. Contractor to provide blocking adequate to withstand full test pressure.
2. Pour concrete blocking against undisturbed earth.
3. All concrete shall be commercial grade concrete.
4. Wrap pipe and/or fittings with 2 layers of polyethylene film where in contact with concrete
5. Keep concrete clear of all joints and accessories.
6. Stirrups shall be deformed galvanized cold rolled steel AASHTO M31 (ASTM A615), Grade 60. Coat with coal tar epoxy after installation.

The selection and use of this Standard Drawing, while designed in accordance with generally accepted engineering principles and practices, is the sole responsibility of the user and should not be used without consulting a Registered Professional Engineer.

CALC. BOOK NO. N/A

BASELINE REPORT DATE 14-JUL-2014

NOTE: All material, and workmanship shall be in accordance with the current Oregon Standard Specifications

OREGON STANDARD DRAWINGS

THRUST BLOCKING

2015

DATE	REVISION DESCRIPTION

Effective Date: June 1, 2016 - November 30, 2016 RD250

REGISTERED PROFESSIONAL ENGINEER — OREGON — JULY 13, 2004 — ALEX M. PALM

EXPIRES: 12/31/2016

Rev.	Date	Dwg	Description

CALL BEFORE YOU DIG !
ONE CALL· (800) 332-2344
OAR 952-001-0010 THROUGH
OAR 952-001-0090

i.e. ENGINEERING
809 SE Pine Street
Roseburg, Oregon 97470
PHONE (541) 673-0166
FAX (541) 440-9392
iemail@ieengineering.com

Project Name:
SPRUCE ST. – PARROTT ST. IMPROVEMENTS

Title:
WATER STANDARD DETAILS

DES AMP	PROJECT NO. 149-189
DWG LAUB	DATE: NOVEMBER 13, 2015
CHK AMP	SCALE: NONE
APP AMP	SHEET: SD.4

DO NOT DUPLICATE

RD250 rd250.dgn 14-JUL-2014

JohnL Apr 11, 2016 Z:\JOBS\0149-City of Roseburg\149-189 Spruce-Parrott Improvements\CADD\CONSTRUCTION\149-189_C-DETAILS.dwg

NOTES:

PRIOR TO DELIVERY OF PRECAST MANHOLE SECTIONS FOR THE JOB SITE, PERFORM YARD PERMEABILITY TESTS AT THE POINT OF MANUFACTURE. TEST ALL MANHOLE SECTIONS TO BE SUPPLIED FOR THIS PROJECT. ALL TEST SPECIMENS WILL BE MAT TESTED, AND SHALL MEET THE PERMEABILITY TEST REQUIREMENTS OF ASTM C 498. THE ENGINEER MAY REQUIRE THAT EACH MANHOLE BE TESTED PER ASTM C 1244 AS AN ALTERNATIVE TO ASTM C 498. ALL TESTS SHALL BE OBSERVED AND CERTIFIED BY A QUALIFIED REGISTERED PROFESSIONAL ENGINEER OR CERTIFIED SPECIAL INSPECTOR PROVIDED BY THE MANUFACTURER

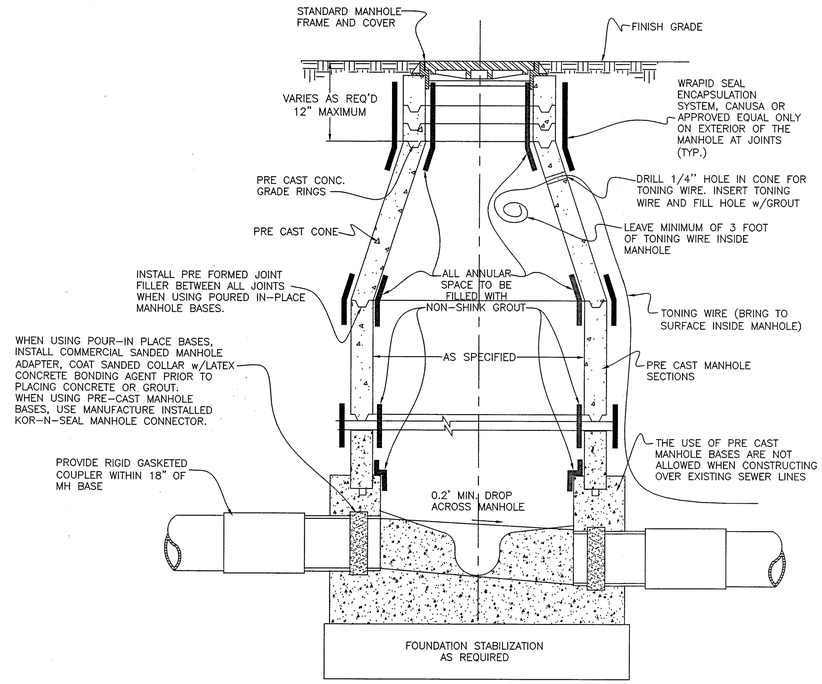

TYPICAL SEWER MANHOLE
NTS

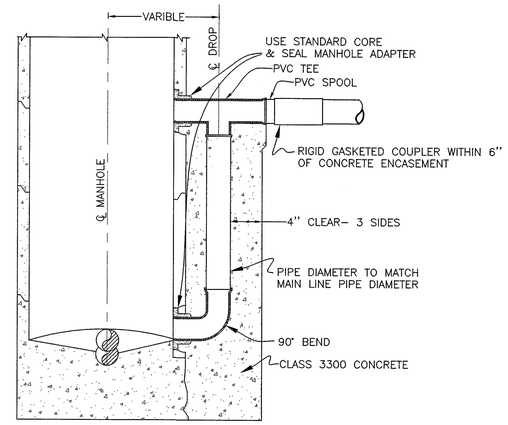

TYPICAL OUTSIDE DROP MANHOLE
NTS

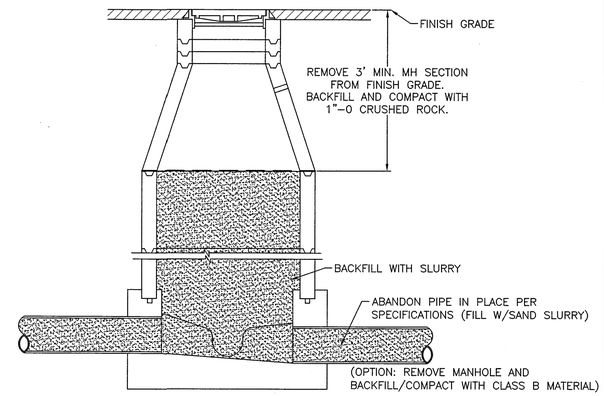

TYPICAL MANHOLE (ABANDONED)
NTS

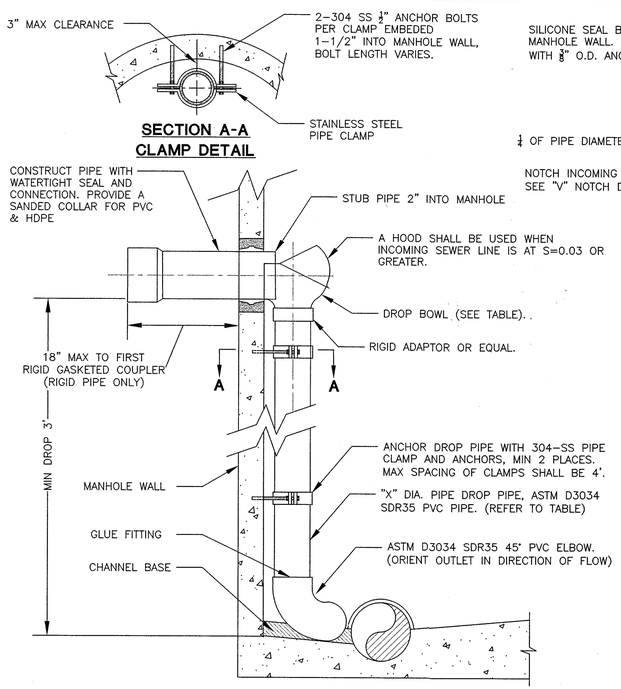

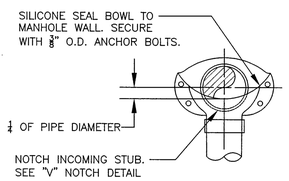

DROP BOWL W/ HOOD DETAIL

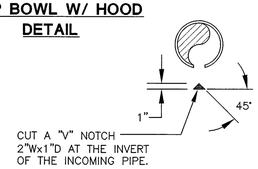

"V" NOTCH DETAIL

INCOMING SEWER SIZE	DROP PIPE SIZE "X"	DROP BOWL MODEL
8" DIA.	6" DIA.	A-6
10" DIA.	8" DIA.	B-8
12" DIA.	10" DIA.	B-10

DROP BOWL MODEL DETAIL

ALL INSIDE DROP CONNECTIONS SHALL USE THE DROP BOWL AS PRODUCED BY: RELINER-DURAN, INC. OR EQUAL

PIPED INSIDE DROP CONNECTION WITH DROP BOWL
NTS

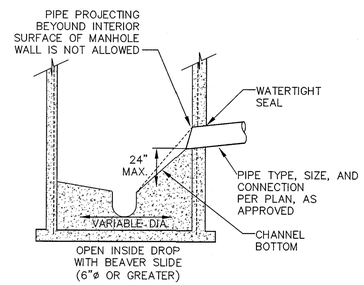

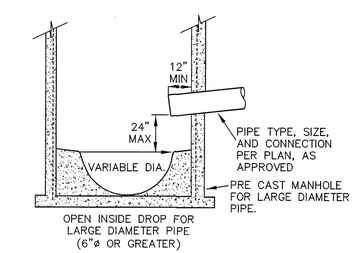

OPEN INSIDE DROP MANHOLE
NTS

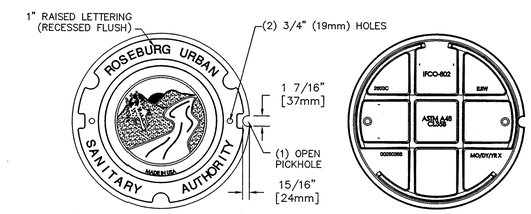

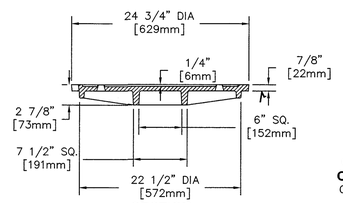

CALL BEFORE YOU DIG !
ONE CALL: (800) 332-2344
OAR 952-001-0010 THROUGH
OAR 952-001-0090

TYPICAL SEWER MANHOLE COVER
NTS

ROSEBURG URBAN SANITARY AUTHORITY
1297 NE GRANDVIEW P.O. BOX 1185
ROSEBURG, OR 97470
PHONE: (541)-672-1551

SANITARY SEWER MANHOLE DETAILS

SCALE: N.T.S.
DRAWN: DTM
SHEET: SD.5
REVISED 03/10/16

Z:\JOBS\0149-City of Roseburg\149-189 Spruce-Fircroft Improvements\CADD\CONSTRUCTION\149-189_C-DETAILS.dwg
Apr 11, 2016 JohnL

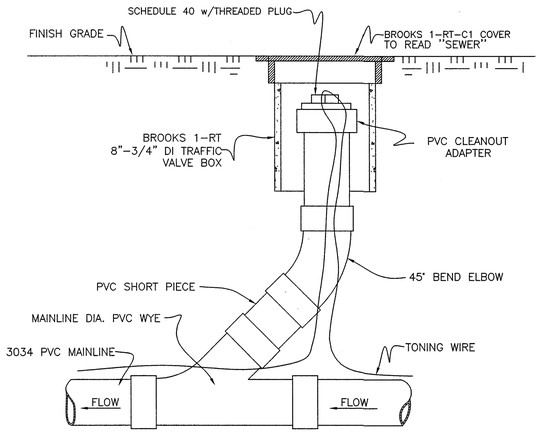

TYPICAL 4"-6" SEWER CLEANOUT

NTS

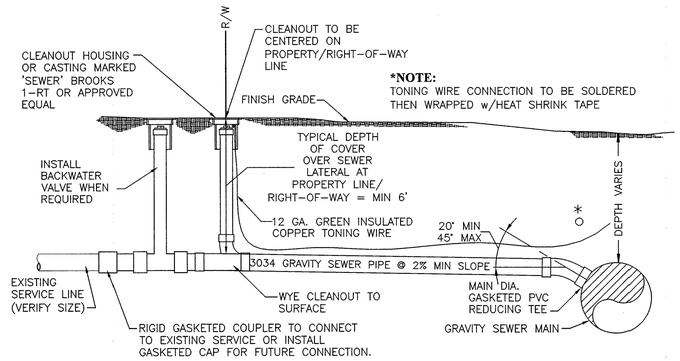

TYPICAL 4"-6" SEWER SERVICE CONNECTION

NTS

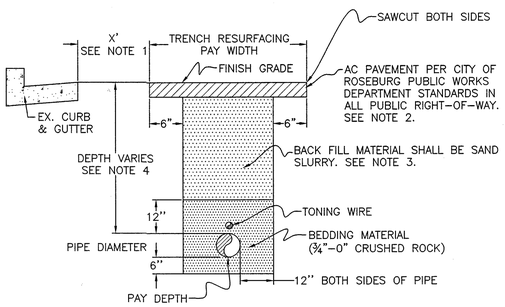

NOTES:

1. WHEN X IS LESS THAN 5', CONTRACTOR SHALL REMOVE AND REPLACE AC PAVEMENT TO CURB AND/OR GUTTER.
2. WHEN SEWER MAINLINE IS NOT LOCATED IN PUBLIC RIGHT-OF-WAY, AC SHALL BE PER APPROVED PLANS.
3. WHEN SEWER MAINLINE IS NOT IN PUBLIC RIGHT-OF-WAY, BACKFILL MATERIAL SHALL BE CLASS "B" PER ODOT/APWA STANDARD SPECIFICATIONS SECTION 00405.
4. TYPICAL DEPTH OF COVER OVER SEWER LATERAL AT PROPERTY LIN/RIGHT-OF-WAY SHALL BE 6' MIN.

TYPICAL SEWER MAINLINE TRENCH

NTS

***NOTE:**
TYPICAL DEPTH OF ALL SEWER SERVICE LATERALS SHALL BE 6' PER TYPICAL SEWER SERVICE CONNECTION DETAIL

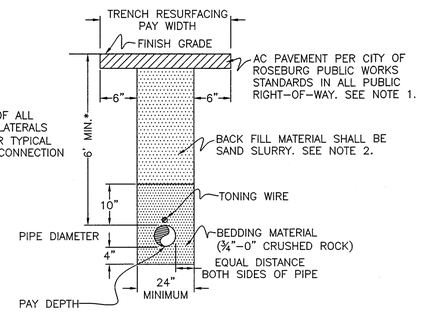

NOTES:

1. WHEN SEWER MAINLINE IS NOT LOCATED IN PUBLIC RIGHT-OF-WAY, AC SHALL BE PER APPROVED PLANS.
2. WHEN SEWER MAINLINE IS NOT IN PUBLIC RIGHT-OF-WAY, BACKFILL MATERIAL SHALL BE CLASS "B" PER ODOT/APWA STANDARD SPECIFICATIONS SECTION 00405.

TYPICAL SEWER SERVICE LINE TRENCH

NTS

CALL BEFORE YOU DIG !
ONE CALL: (800) 332-2344
OAR 952-001-0010 THROUGH
OAR 952-001-0090

ROSEBURG URBAN SANITARY AUTHORITY
1297 NE GRANDVIEW P.O. BOX 1185
ROSEBURG, OR 97470
PHONE: (541)-672-1551

SANITARY SEWER PIPE DETAILS

SCALE: N.T.S.
DRAWN: DTM
SHEET: SD.6
REVISED 03/10/16

Z:\JOBS\0149-City of Roseburg\149-189 Spruce-Parrott Improvements\CADD\CONSTRUCTION\149-189_C-DETAILS.dwg
Apr 11, 2016
JohnL