FAIRMOUNT
STORM SEWER IMPROVEMENTS
CITY OF ROSEBURG,
DOUGLAS COUNTY, OREGON

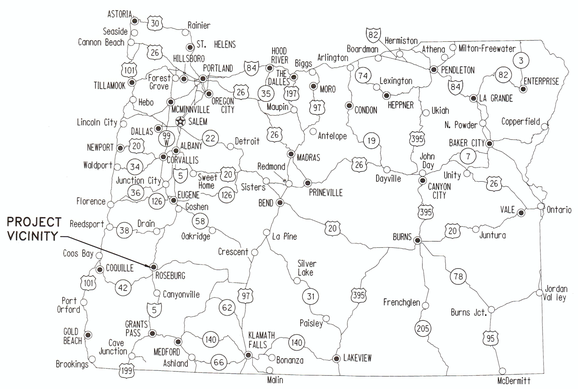

VICINITY MAP
NTS

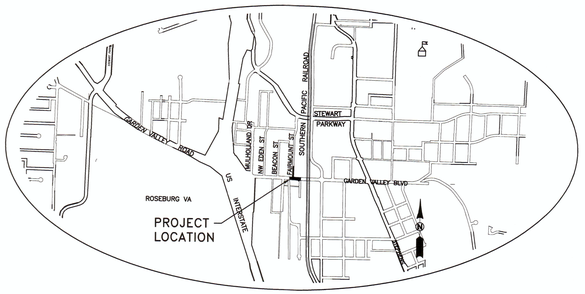

LOCATION MAP
NTS

CITY PROJECT NUMBER 16PW07

SHEET INDEX

1. COVER SHEET
2. STORM SEWER PLAN & PROFILE
3. STANDARD DETAILS
4. TRAFFIC CONTROL PLAN
5. TRAFFIC CONTROL DETAILS

LEGEND

(ELEV.)	EXISTING ELEV.
ELEV.	NEW ELEV.
	SAW CUT
TV	EXISTING CABLE TV
	EXISTING EDGE OF AC OR GRAVEL
POH	EXISTING POWER (OVERHEAD)
PUG	EXISTING POWER (UNDERGROUND)
UGU	NEW UNDERGROUND (TV, POWER, PHONE)
GAS	EXISTING GAS
R/W	EXISTING RIGHT-OF-WAY
R/W	NEW RIGHT-OF-WAY
X	EXISTING FENCE
X	NEW FENCE
W	EXISTING WATER
WM	EXISTING WATER MAIN
W	NEW WATER
STS	EXISTING STORM SEWER (STS)
STS	NEW STORM SEWER (STS)
P.D	NEW CURTAIN DRAIN
SS	EXISTING SANITARY SEWER (SS)
SS	NEW SANITARY SEWER (SS)
PS	EXISTING PRESSURE SEWER (PS)
PS	NEW PRESSURE SEWER (PS)
FM	EXISTING FORCE MAIN (FM)
FM	NEW FORCE MAIN (FM)
S-F	SILT FENCE (S-F)
C-F	CONSTRUCTION FENCE (CF)
AC	ASPHALT
AC (PIPE)	ASBESTOS CONCRETE
BW	BACK OF WALK
CB	CATCH BASIN
CF	CONSTRUCTION FENCE
CI	CURB INLET (STORM)
CI (PIPE)	CAST IRON (WATER LINE)
CONC.	CONCRETE
COR	CITY OF ROSEBURG
DI	DUCTILE IRON
EX	EXISTING
FF	FINISH FLOOR
FG	FINISH GRADE
INV	INVERT
MH	MANHOLE
OG	ORIGINAL GROUND
OSD	OREGON STANDARD DRAWING
SHT	SHEET
SS	SANITARY SEWER
STS	STORM SEWER
TFC	TOP FACE OF CURB
TW	TOP OF WALK

	EXISTING CURB INLET (CI)
	NEW CURB INLET (CI)
	EXISTING CATCH BASIN (CB)
	NEW CATCH BASIN (CB)
	CLEANOUT
	GUY WIRE
	GAS METER
	EXISTING FIRE HYDRANT
	NEW FIRE HYDRANT
	LANDSCAPING
	EXISTING VALVE
	NEW VALVE
	EXISTING MANHOLE (MH)
	NEW MANHOLE (MH)
	POWER POLE
	PHONE PED
	EXISTING LIGHT POLE
	NEW LIGHT POLE
MAIL	MAIL BOX
	EXISTING WATER SERVICE
	NEW WATER SERVICE
	BLOWOFF
	CABLE TV PED (TV)
	EXISTING SIGN
	EXISTING CONCRETE
DETAIL NUMBER / SHEET NUMBER	DETAIL ID

ASBESTOS SPECIAL NOTE:

MATERIALS CONTAINING ASBESTOS MAY BE PRESENT IN UNDERGROUND PIPE SYSTEMS. ALL APPROPRIATE FEDERAL, STATE, COUNTY AND MUNICIPAL RULES, REGULATIONS AND GUIDELINES MUST BE FOLLOWED WHEN WORKING WITH ASBESTOS-CONTAINING MATERIAL. NONFRIABLE MATERIAL MUST BE HANDLED, TRANSPORTED AND DISPOSED OF IN A WAY THAT PREVENTS IT FROM BECOMING FRIABLE AND RELEASING ASBESTOS FIBERS. IF AC PIPE IS SHATTERED, DAMAGED OR BADLY WEATHERED, IT IS CONSIDERED TO BE FRIABLE AND WILL LIKELY RELEASE ASBESTOS FIBERS. DEQ LICENSED ASBESTOS ABATEMENT CONTRACTOR USING DEQ CERTIFIED WORKERS MUST REMOVE ALL FRIABLE ASBESTOS MATERIAL. ANY AND ALL PERMITS AND FEES THAT ARE REQUIRED BY THE DEQ, DOUGLAS, COUNTY AND ANY OTHER REGULATORY AGENCY MUST BE OBTAINED BY THE CONTRACTOR PRIOR TO DISPOSING OF THE ASBESTOS CONTAINING MATERIAL. FOR INFORMATION ABOUT ASBESTOS RULES, CONTACT THE DEQ WESTERN REGION OFFICE IN MEDFORD, OREGON.

CALL BEFORE YOU DIG !
ONE CALL: (800) 332-2344
OAR 952-001-0010 THROUGH
OAR 952-001-0090

REGISTERED PROFESSIONAL ENGINEER 72679PE OREGON NOVEMBER 13, 2007 ERIK D. RANGER
EXPIRES: 12/31/2016

Rev.	Date	Dwg	Description

i.e. ENGINEERING
809 SE Pine Street
Roseburg, Oregon 97470
PHONE (541) 673-0166
FAX (541) 440-9392
iemail@ieengineering.com

Project Name:
FAIRMOUNT
STORM SEWER IMPROVEMENTS

Title:
COVER SHEET

DES EDR	PROJECT NO. 149-194
DWG DTM	DATE: APRIL 07, 2016
CHK EDR	SCALE: AS SHOWN
APP EDR	SHEET: 1 OF 5

Drafter Apr 08, 2016 Z:\JOBS\0149-City of Roseburg\149-194 Fairmount-Garden Valley Drainage Improvements\CADD\CONSTRUCTION\149-194_C-DET.dwg

DO NOT DUPLICATE

KEYED CONSTRUCTION NOTES:

1. REMOVE EXISTING CATCH BASIN AND INSTALL NEW CG-2 CURB INLET w/WATER QUALITY FILTER INSERT. EXISTING ROLLED CURB & GUTTER TO BE TRANSITIONED TO VERTICAL CURB. SEE DETAILS. (4/3) (5/3) (6/3)
2. INSTALL STS PIPE. SEE PLANS FOR LENGTH, SIZE AND SLOPE. (7/3) (9/3)
3. REMOVE EXISTING STS MH. INSTALL NEW 60" STS MH. SEE DETAILS. (1/3) (2/3) (8/3)
4. INSTALL NEW 60" STS MH. EXISTING 15" STS PIPE CONNECTION TO BE FIELD FIT AND VERIFIED. SEE DETAILS. (1/3) (2/3) (8/3)
5. ABANDON EXISTING 15" PIPE IN PLACE AND FILL WITH SAND OR CONTROLLED LOW STRENGTH MATERIAL MEETING THE REQUIREMENTS OF STANDARD SPECIFICATIONS 00442. SHOWN AS THIS:
6. TIE INTO EXISTING 6'X6' BOX CULVERT. SAWCUT BOX CULVERT AND GROUT NEW PIPE CONNECTION.
7. TIE EXISTING 12" STS PIPE INTO NEW CATCH BASIN.
8. CONNECT TO EXISTING 15" STS PIPE. (10/3)
9. INSTALL NEW 72" STS MH. SEE DETAILS. (1/3) (2/3) (8/3)
10. ABANDON EXISTING PIPE IN PLACE. (3/3)
11. CONNECT TO EXISTING 12" PIPE. (10/3)
12. INSTALL 24"X12" TEE.
13. REPLACE 15 LF OF 6" SANITARY SEWER LATERAL WITH NEW 6" 3034 PVC AT LOWER ELEVATION TO GO BELOW STORM SEWER. 8"X6" TEE MAY NEED TO BE REPLACED AS WELL. USE SOLID SLEEVE FITTINGS TO MAKE CONNECTIONS. PROVIDE BENDS AS REQUIRED. 8" SANITARY INV ELEV = 469.00±. BRIDGE OVER SANITARY SEWER WITH CONCRETE CAP AT STORM AND SANITARY SEWER CROSSING FOR FULL STORM TRENCH WIDTH. SEE DETAIL THIS SHEET AND (11/3)

GENERAL NOTES:

1. EXPOSED PIPE ENDS OF PIPES NOT SLURRY FILLED SHALL BE PLUGGED. (3/3)
2. MANHOLE INVERTS SHOWN AND PIPE SLOPES ARE MEASURED FROM CENTER OF MANHOLE TO CENTER OF MANHOLE. SUPPLIER OF MANHOLES CONSTRUCT MANHOLES TO COMPENSATE FOR PIPE SLOPE AND MANHOLE RADIUS.
3. OFFSETS FOR STRUCTURE ARE AT TOP FACE OF CURB AT STRUCTURE MIDPOINT.
4. STRIPING TO BE COMPLETED BY CITY.
5. GAS SERVICES TO BE REALIGNED BY AVISTA AS REQUIRED. WATER SERVICES TO BE REALIGNED BY CITY AS REQUIRED. CONTRACTOR TO COORDINATE WITH AVISTA AND CITY.

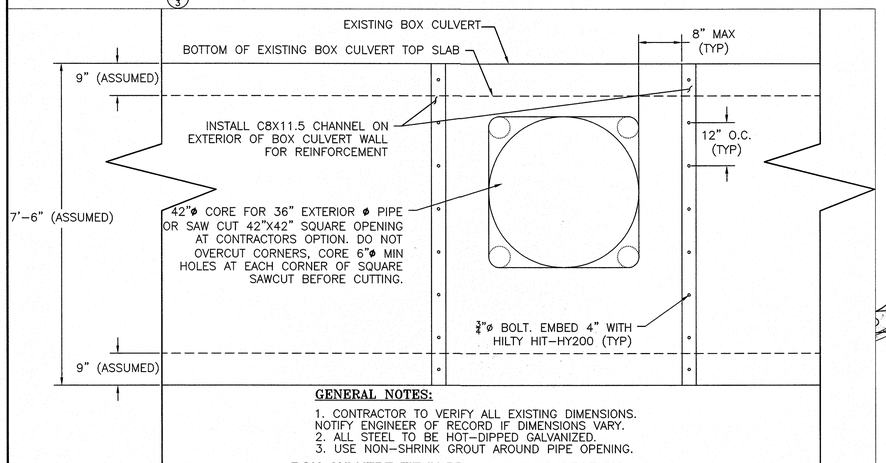

GENERAL NOTES:

1. CONTRACTOR TO VERIFY ALL EXISTING DIMENSIONS. NOTIFY ENGINEER OF RECORD IF DIMENSIONS VARY.
2. ALL STEEL TO BE HOT-DIPPED GALVANIZED.
3. USE NON-SHRINK GROUT AROUND PIPE OPENING.

BOX CULVERT TIE-IN DETAIL CROSS SECTION
NTS

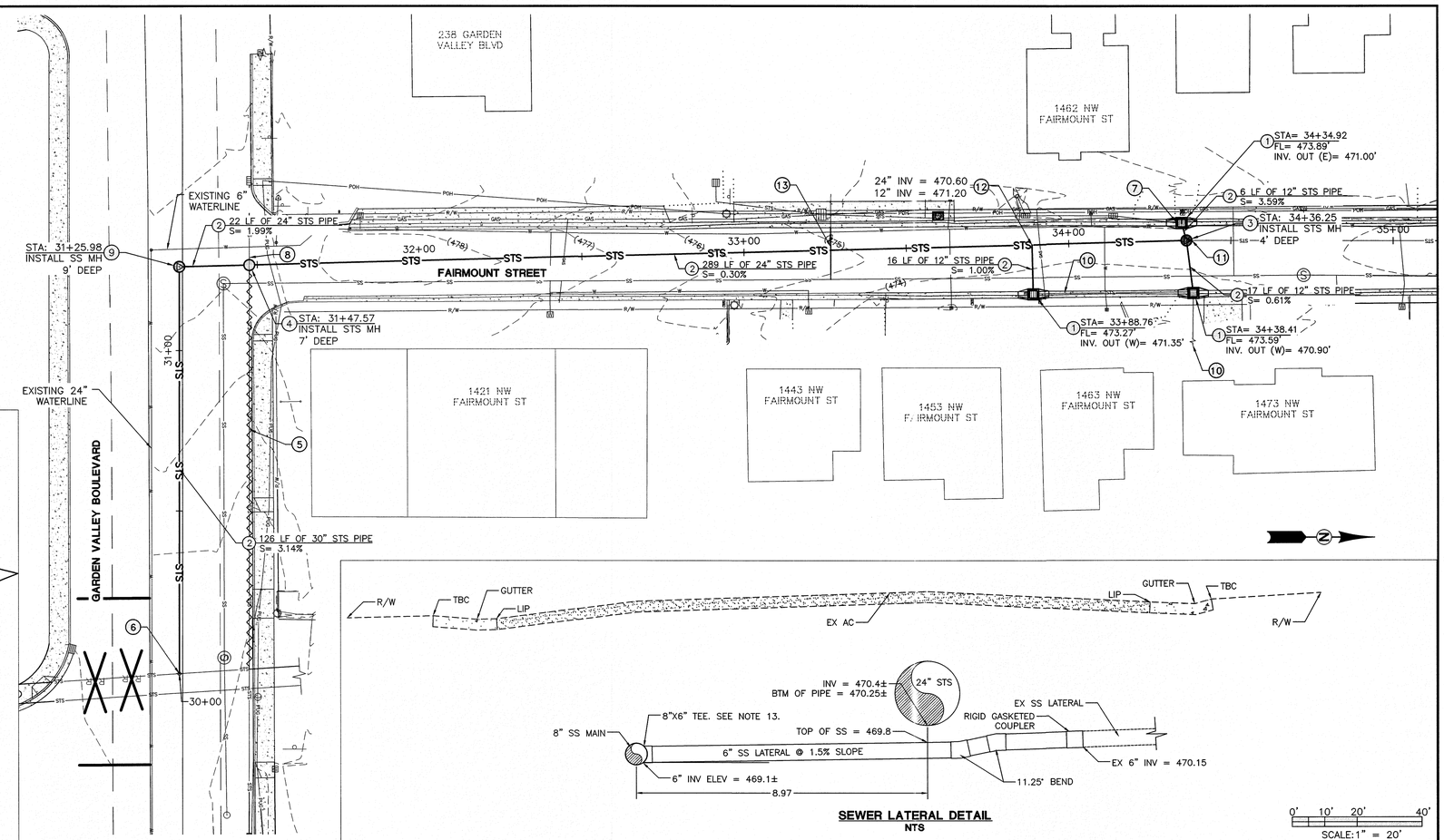

SEWER LATERAL DETAIL
NTS

0' 10' 20' 40'
SCALE: 1" = 20'

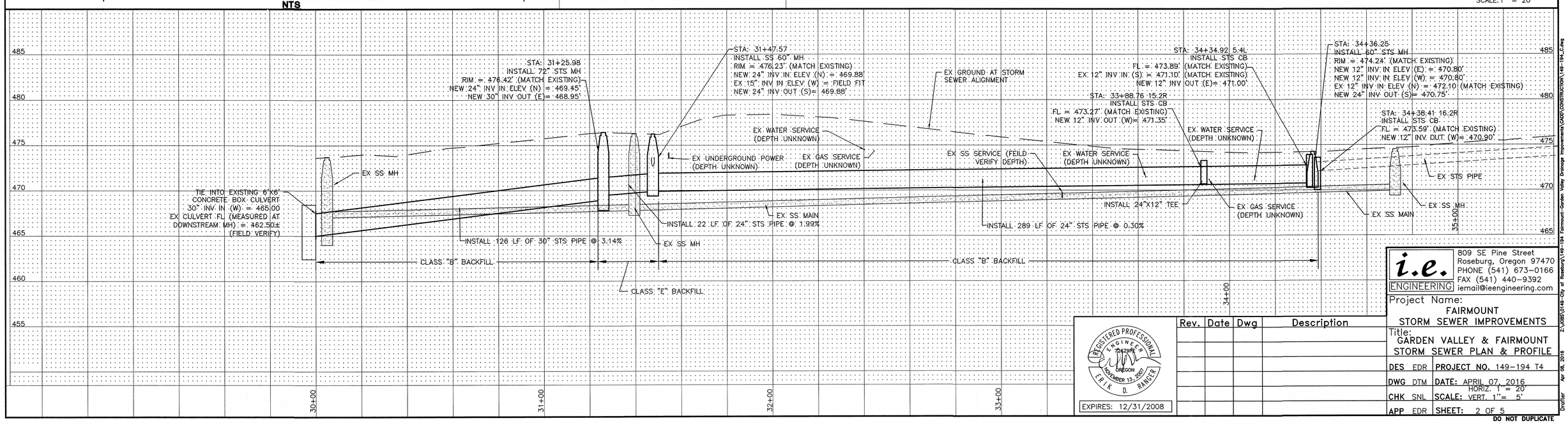

i.e. ENGINEERING
809 SE Pine Street
Roseburg, Oregon 97470
PHONE (541) 673-0166
FAX (541) 440-9392
iemail@ieengineering.com

REGISTERED PROFESSIONAL ENGINEER 78670PE OREGON NOVEMBER 13, 2007 ERIK D. RANGER
EXPIRES: 12/31/2008

Rev.	Date	Dwg	Description

Project Name: FAIRMOUNT STORM SEWER IMPROVEMENTS

Title: GARDEN VALLEY & FAIRMOUNT STORM SEWER PLAN & PROFILE

DES EDR	PROJECT NO. 149-194 T4
DWG DTM	DATE: APRIL 07, 2016
CHK SNL	SCALE: HORIZ. 1" = 20' VERT. 1"= 5'
APP EDR	SHEET: 2 OF 5

DO NOT DUPLICATE

Drafter Apr 08, 2016 Z:\JOBS\0149-City of Roseburg\149-194 Fairmount-Garden Valley Drainage Improvements\CADD\CONSTRUCTION\149-194_C.dwg

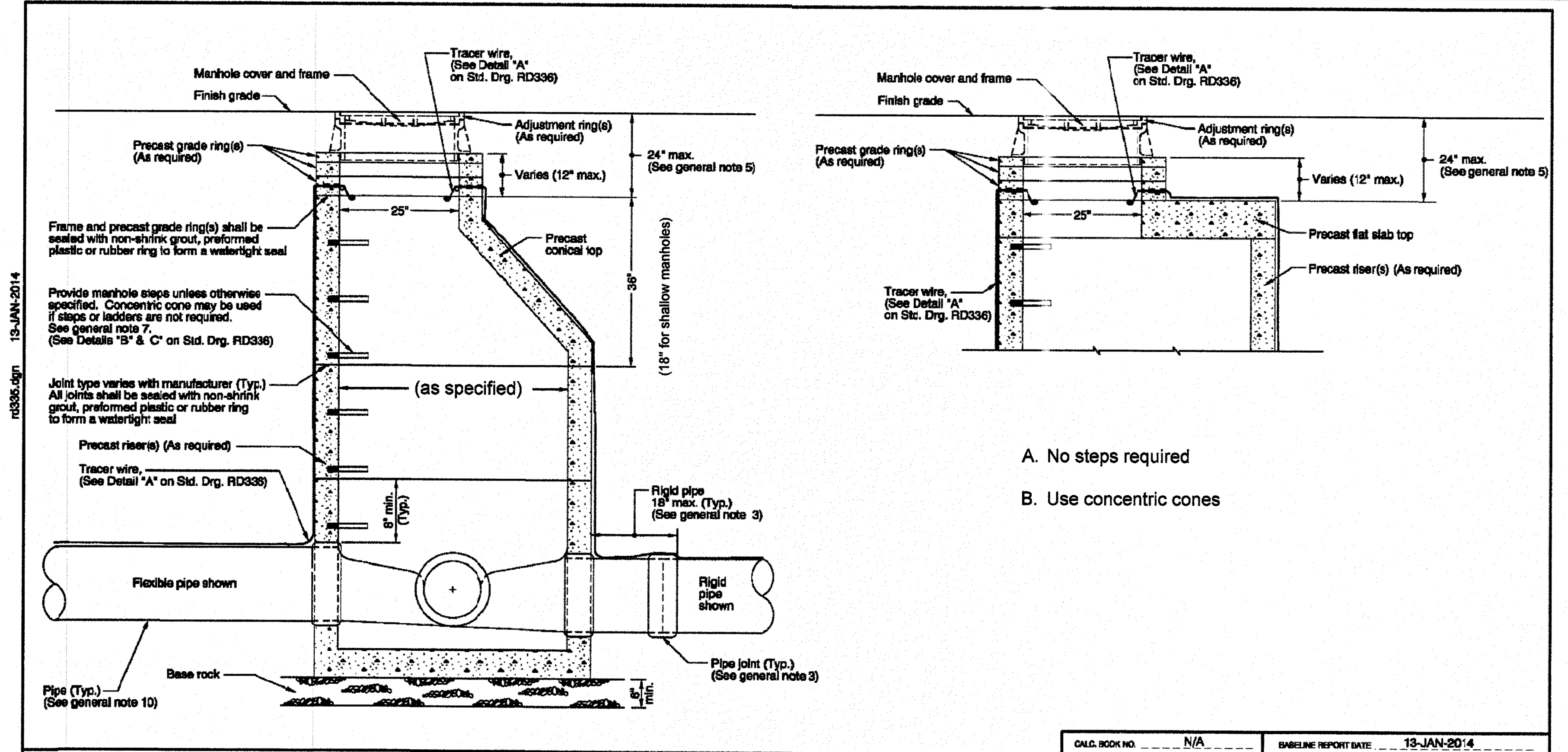

A. No steps required

B. Use concentric cones

GENERAL NOTES FOR ALL DETAILS:

1. All precast sections shall conform to requirements of ASTM C478.
2. Standard precast manhole section diameter shall be 48". Use 42" if specified by
3. unrestrained joint within 18" of manhole wall. Joint type varies with manufacturer.
4. See Std. Drg. RD344 for manhole base section.
5. Adjust 24" maximum.
6. All connecting pipes shall have a tracer wire, or approved alternate.
7. Ladder with notched safety rail and removable extension is reqd. for manholes with depths between 24'-0" and 50'-0".
8. See Std. Drg. RD336 for details not shown.
9. See Std. Drg. RD356 for manhole covers and frames, manhole adjustment rings, etc.
10. Max. pipe diameter varies with pipe material.
11. See Std. Drg. RD342 for shallow manholes.

CALC. BOOK NO. N/A — BASELINE REPORT DATE 13-JAN-2014

NOTE: All material and workmanship shall be in accordance with the current Oregon Standard Specifications

The selection and use of this Standard Drawing, while designed in accordance with generally accepted engineering principles and practices, is the sole responsibility of the user and should not be used without consulting a Registered Professional Engineer.

OREGON STANDARD DRAWINGS
MODIFIED
STANDARD STORM SEWER MANHOLE
2008

DATE	REVISION DESCRIPTION
07-2013	REVISED NOTES
01-2014	REVISED DETAIL & ADDED NOTES

rd335.dgn 13-JAN-2014 — RD335

Effective Date: June 1, 2014 - November 30, 2014 RD335

1/3

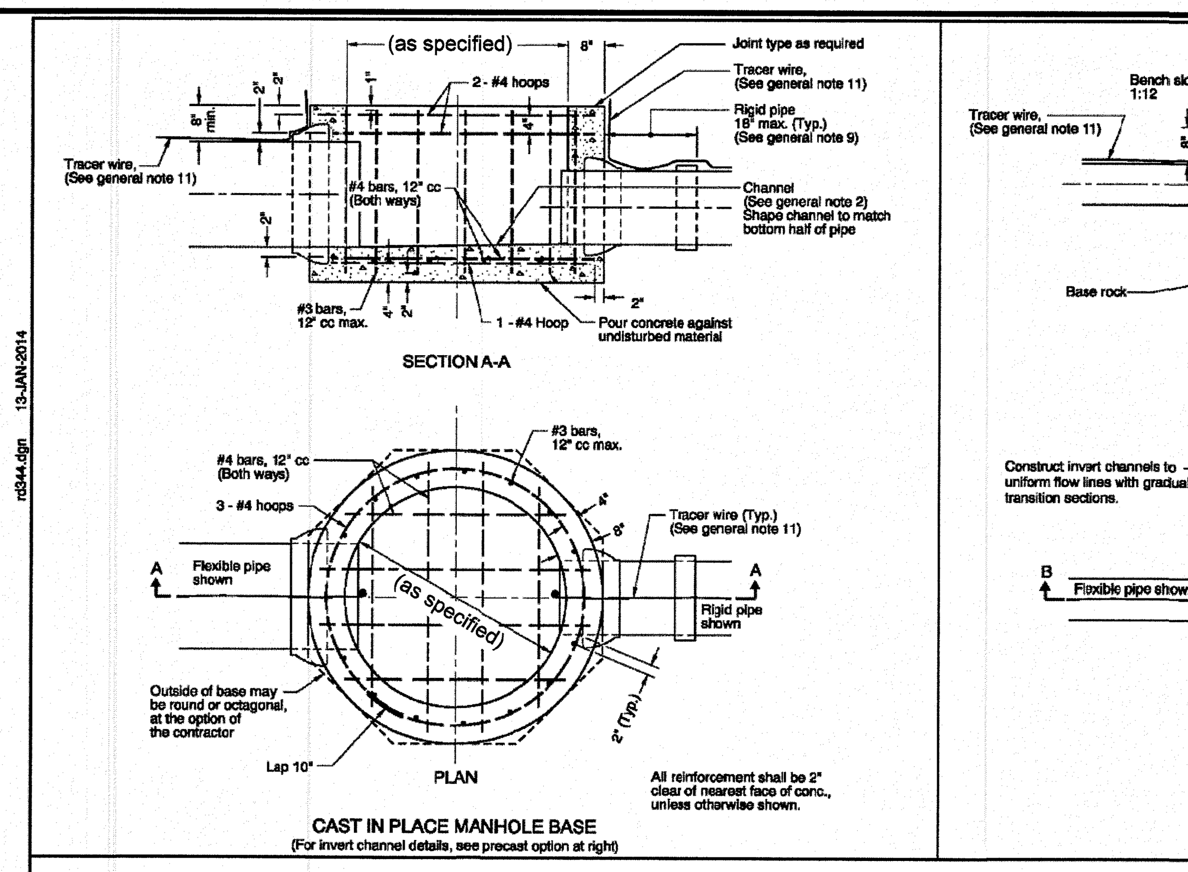

GENERAL NOTES FOR ALL DETAILS:

1. All concrete shall be commercial grade concrete.
2. Channels shall be constructed to provide smooth slopes and radii to outlet pipe.
3. Bases may be precast or cast in place.
4. Max. pipe diameter varies with pipe material.
5. Use on 42" and 48" diameter manhole.

Pipe(s) may extend 2" max. beyond the interior manhole wall.

7. Location, elevation, and number of pipe(s) varies.
8. All precast sections shall conform to the requirements of ASTM C478.
9. When rigid pipe is used the connecting pipe shall have a flexible, gasketted and unrestrained joint within 18" of manhole wall. Joint type varies with manufacturer.
10. See Std. Drg. RD336 for manhole steps details.
11. See Std. Drg. RD336 for tracer wire details.
12. At spring line of pipe, extend channel up to crown line on 12:1 batter.

CALC. BOOK NO. N/A — BASELINE REPORT DATE 13-JAN-2014

NOTE: All material and workmanship shall be in accordance with the current Oregon Standard Specifications

The selection and use of this Standard Drawing, while designed in accordance with generally accepted engineering principles and practices, is the sole responsibility of the user and should not be used without consulting a Registered Professional Engineer.

OREGON STANDARD DRAWINGS
MODIFIED
STANDARD MANHOLE BASE SECTION
2008

DATE	REVISION DESCRIPTION
07-2010	REVISED NOTES
07-2012	REVISED DETAILS & NOTES
07-2013	REVISED NOTES
01-2014	REVISED DETAILS & NOTES

rd344.dgn 13-JAN-2014 — RD344

Effective Date: June 1, 2014 - November 30, 2014 RD344

2/3

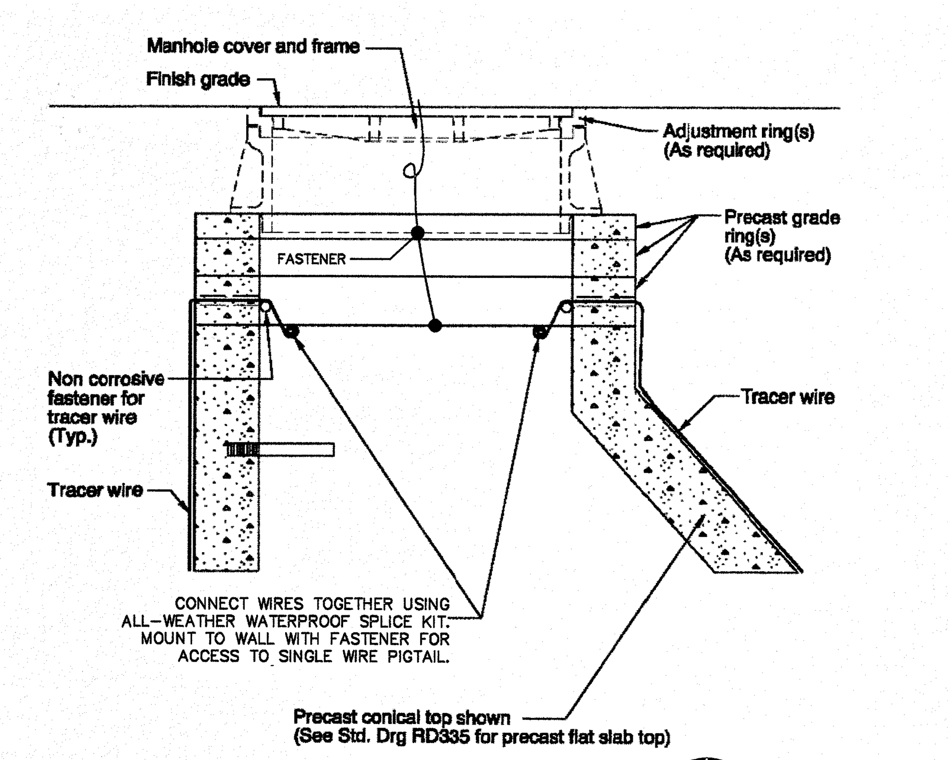

TRACER WIRE DETAIL 8/3
NTS

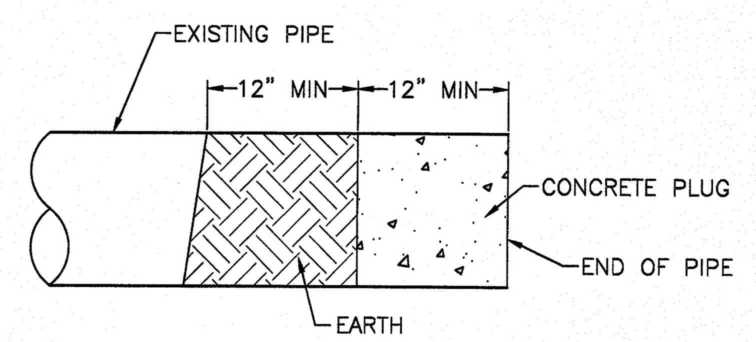

ABANDON PIPE PLUG DETAIL 3/3
NTS

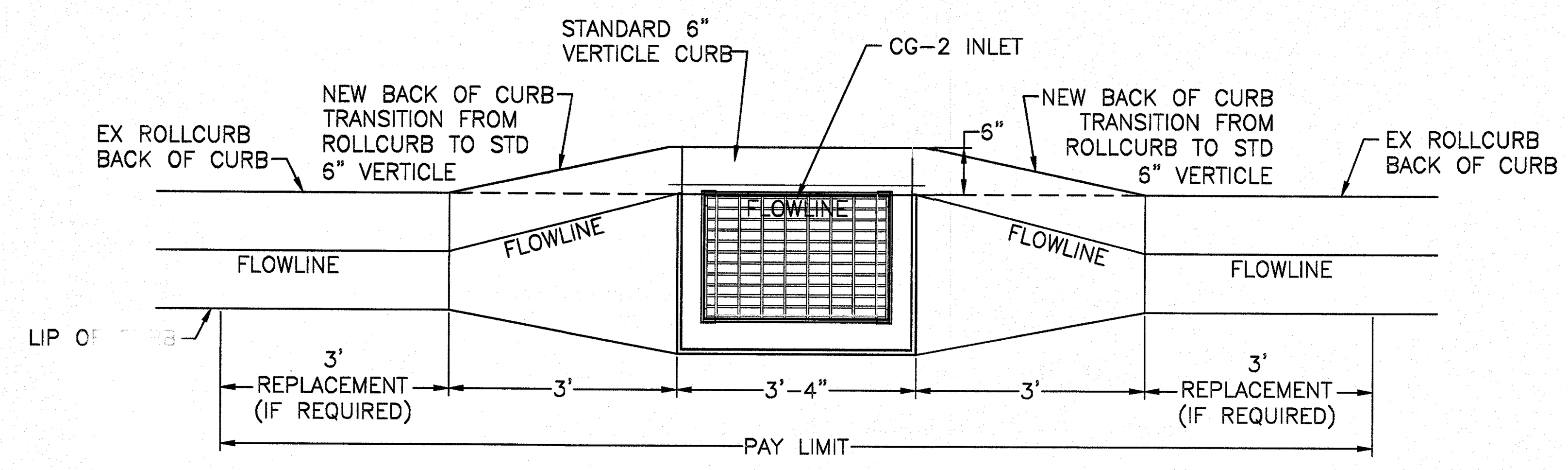

CATCH BASIN CURB TRANSITION DETAIL 4/3
NTS

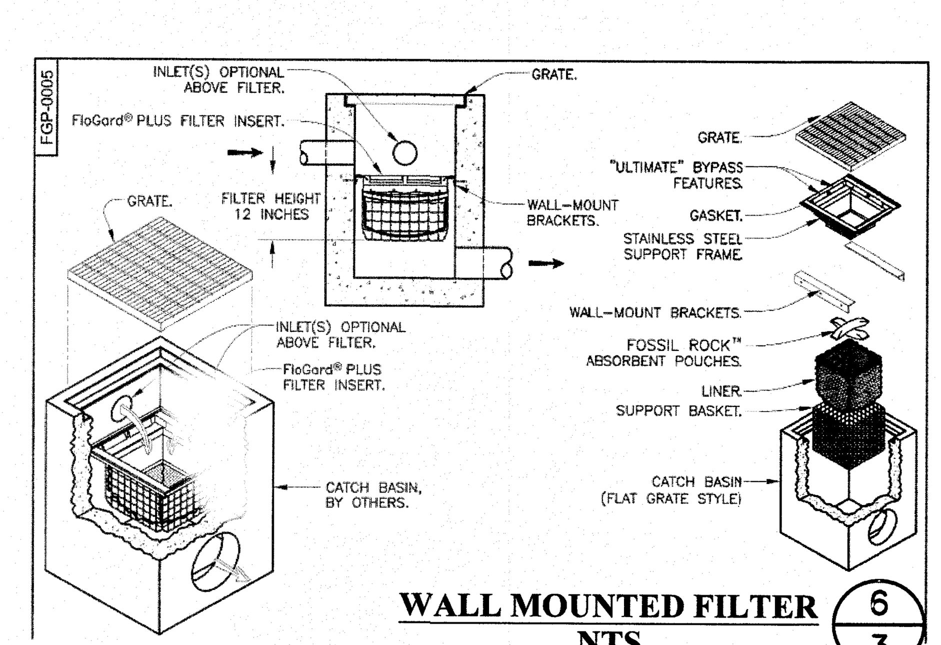

WALL MOUNTED FILTER 6/3
NTS

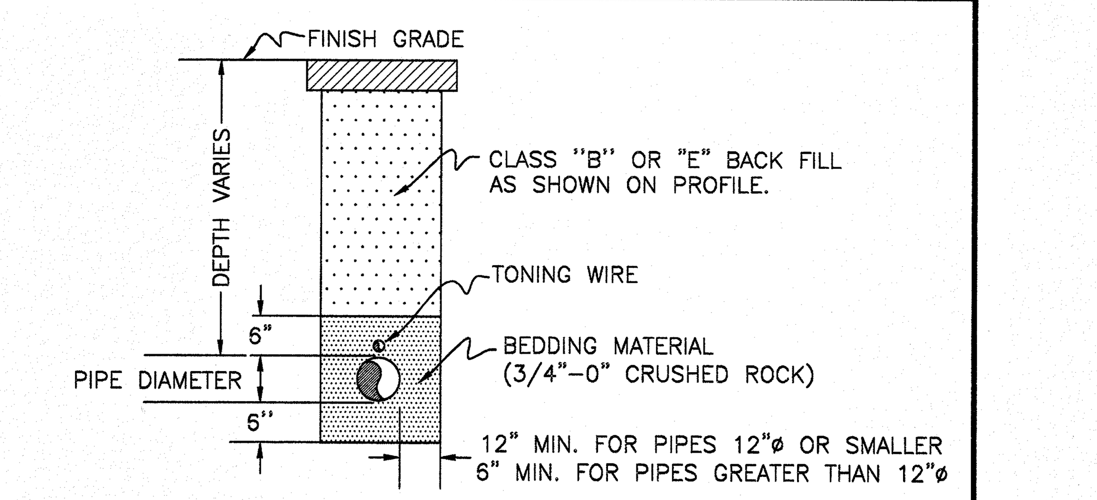

TYPICAL STORM LINE TRENCH DETAIL 9/3

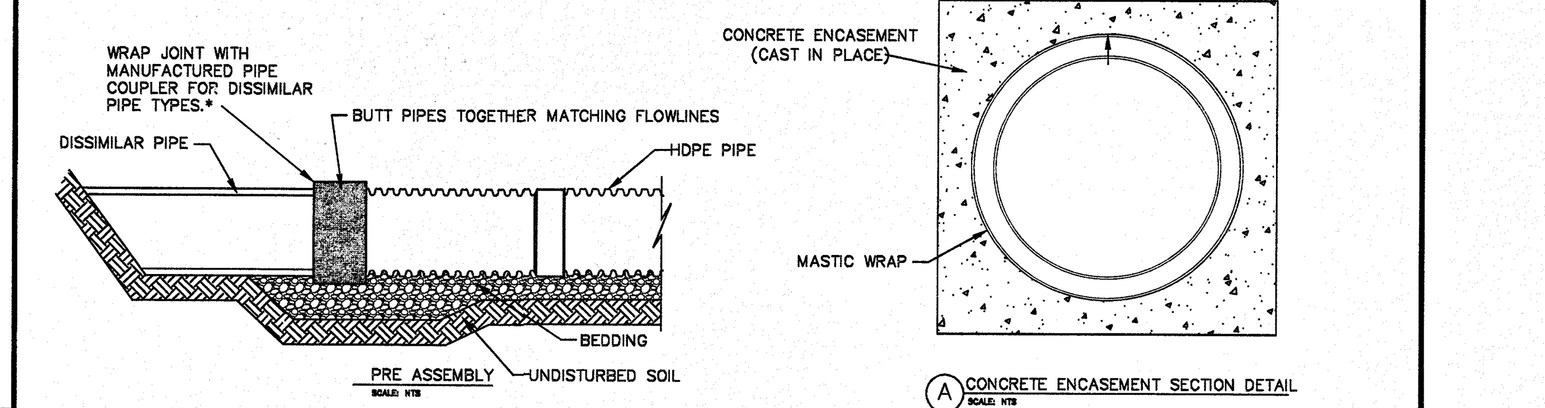

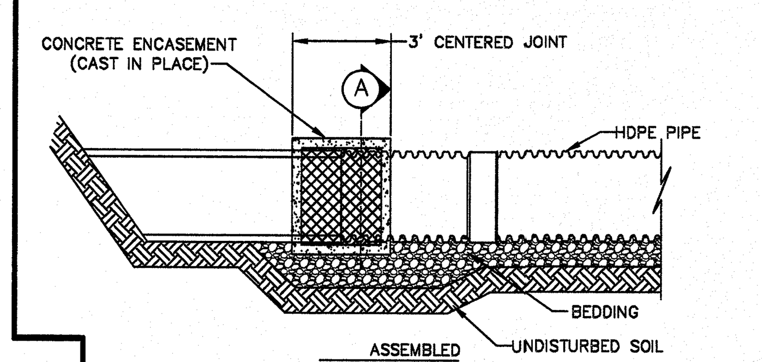

*- THE COUPLER SHALL HAVE AN OUTER COVER OF CROSS-LAMINATED POLYETHYLENE WITH AN UNDER LAYER OF RUBBERIZED BONDING MASTIC THAT IS REINFORCED WITH A WOVEN POLYPROPYLENE FABRIC. THERE SHALL BE A PEELABLE PROTECTIVE RELEASE FILM AGAINST THE BONDING MASTIC THAT IS REMOVED WHEN THE COUPLER IS APPLIED TO THE JOINT. COMPRESSION BANDS SHALL BE LOCATED WITHIN THE COUPLER AND WILL PERFORM AS COMPRESSION SEALS ALONG EACH SIDE OF THE JOINT. THE COUPLER SHALL BE DESIGNED SO THAT WHEN IT IS APPLIED AROUND THE JOINT THE ENDS OVERLAP A MINIMUM OF 8" ON THE LARGEST SIZE PIPE BEING CONNECTED. A BELL HOLE SHALL BE DUG UNDER THE JOINT WITH THE PIPE ENDS BUTTED OR THE SMALLER PIPE PLACED INSIDE THE LARGER PIPE. ALIGN THE PIPE FOR EFFICIENT DRAINAGE FLOW. THE COUPLER SHALL BE PLACED AROUND THE PIPE, BONDING MASTIC SIDE TO THE JOINT, REMOVING THE PROTECTIVE RELEASE FILM. THE COMPRESSION BANDS SHALL BE SECURED AND TIGHTENED TO THE MANUFACTURE'S RECOMMENDATION. THE CLOSING FLAP SHALL COVER ALL REMAINING EXPOSED COMPRESSION BANDS, COMPLETING THE JOINT.

HDPE TO DISSIMILAR PIPE CONNECTION 10/3
NTS

GENERAL NOTES FOR ALL DETAILS:

1. Where precast inlets are used as an alternate to cast-in-place inlets, a 4" compacted leveling bed of sand or ¼"-0 crushed aggregate shall be provided. All precast inlets shall conform to requirements of ASTM C913.
2. Graphics show CG-1 inlet with Type 2 grate. See Table A for inlet dimensions. Type 1 grate allowed only in locations not subject to bicycle or pedestrian use. For frame and grate details, see Std. Drg. RD365.
3. Provide sump only where shown on plans, and allowed by jurisdiction. See Detail B for inlet without sump.
4. For curb details, see Std. Drgs. RD700 & RD701.
5. See Std. Drg. RD336 for tracer wire details, or approved alternate.
6. Max. pipe diameter varies with pipe material.
7. Location, elevation, diameter, slope, and number of pipe(s) varies, see project plans.
8. All concrete shall be commercial grade concrete.
9. ¾" preformed filler (in concrete pavement or gutter only) to extend through thickness of concrete.
10. See Std. Drg. RD363 for gutter transition section, when required. (Pay limit for inlet is expanded when curb and gutter are monolithic)
11. See Std. Drg. RD339 for pipe to structure connections.

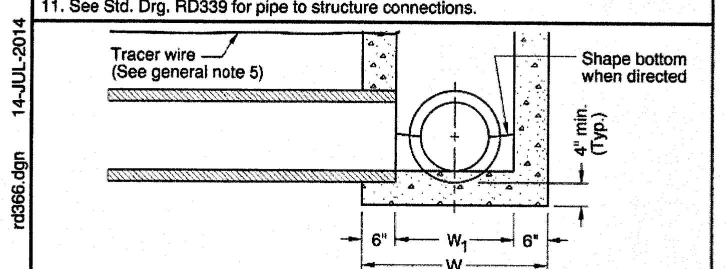

DETAIL B
WITHOUT SUMP

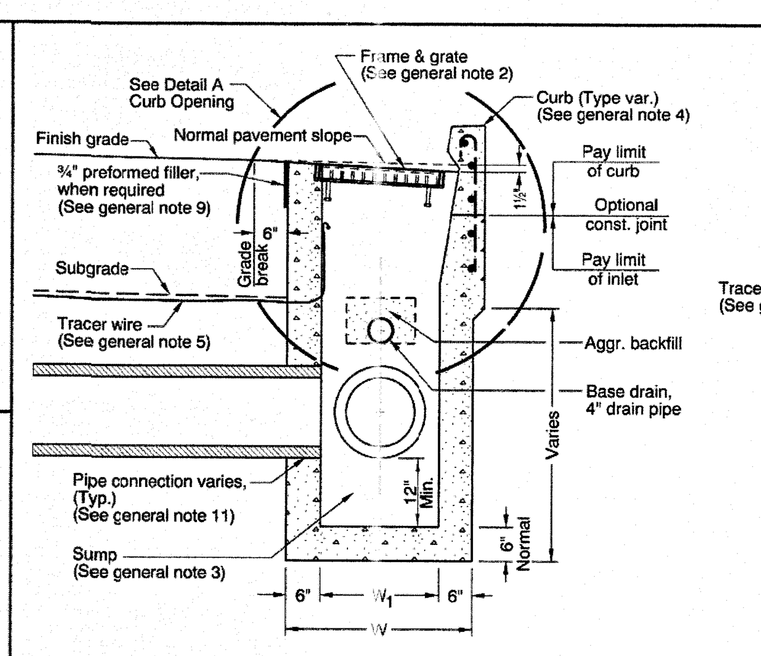

SECTION B - B

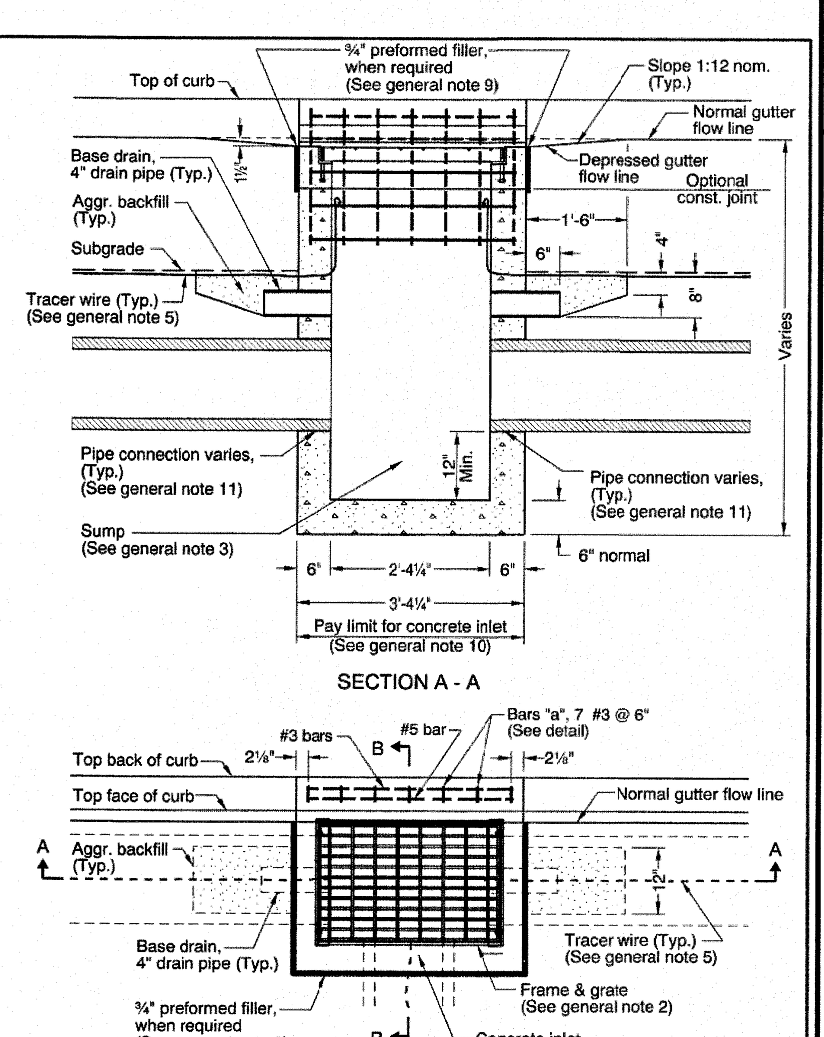

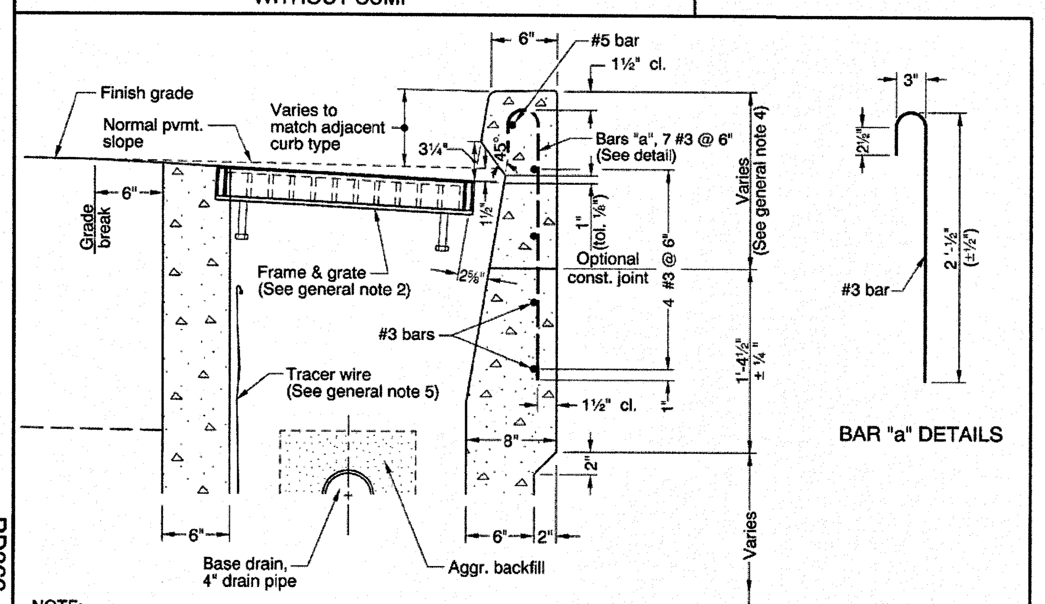

BAR "a" DETAILS

NOTE:
Use details shown on Std. Drg. RD367 when curb inlet channels are used.

DETAIL A
CURB OPENING

TABLE A		
INLET TYPE	W	W_1
CG-1	2'-8⅞"	1'-8⅞"
CG-2	3'-3⅜"	2'-3⅜"

NOTES:

1. #3 "a" bars to be placed during curb construction.
2. All bars to be placed 1½" clear of nearest face of concrete unless shown or noted otherwise.
3. All bars shall be full length.

CALC. BOOK NO. N/A — BASELINE REPORT DATE 14-JUL-2014

NOTE: All material and workmanship shall be in accordance with the current Oregon Standard Specifications

The selection and use of this Standard Drawing, while designed in accordance with generally accepted engineering principles and practices, is the sole responsibility of the user and should not be used without consulting a Registered Professional Engineer.

OREGON STANDARD DRAWINGS
CONCRETE INLETS TYPE CG-1, CG-2 5/3
2015

DATE	REVISION DESCRIPTION

rd366.dgn 14-JUL-2014 — RD366

Effective Date: June 1, 2015 - November 30, 2015 RD366

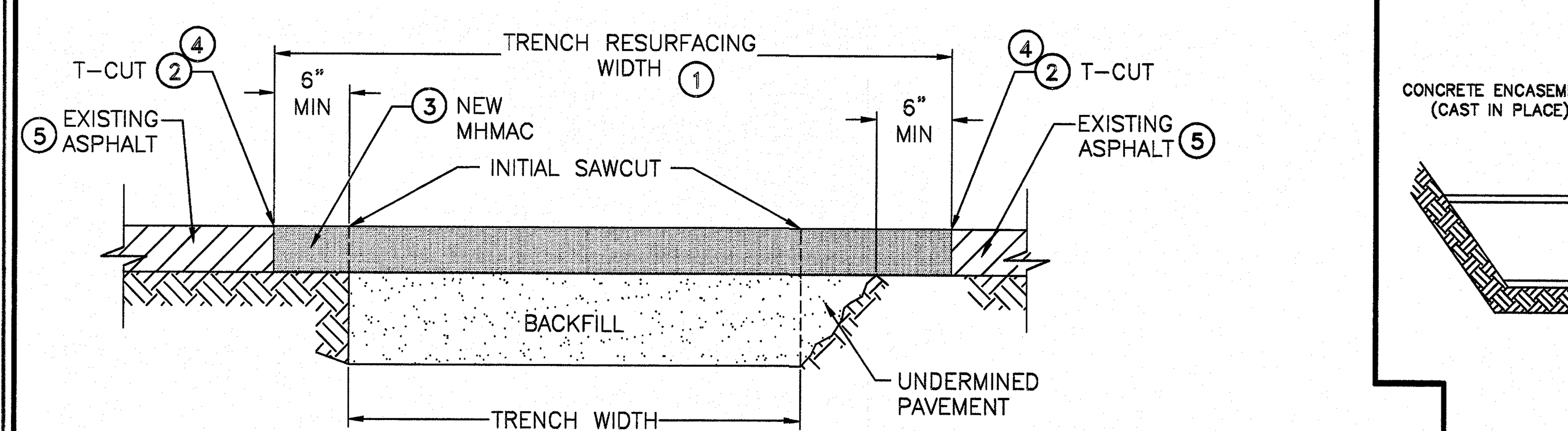

① MAXIMUM TRENCH RESURFACING PAY WIDTH TO BE PER TABLE BELOW.

② T-CUT TO BE A MINIMUM OF 6" FROM EDGE OF EXISTING STABLE SUBGRADE. TACK COAT AT INTERFACE.

③ NEW MHMAC TO BE A MINIMUM THICKNESS OF 4" PLACED IN TWO-2" LIFTS ON FAIRMOUNT AND A MINIMUM OF 7" PLACED IN TWO -2" LIFTS AND ONE 3" LIFT IN GARDEN VALLEY BLVD.

④ TACK COAT AT ALL ASPHALT SURFACE INTERFACE PER STANDARD SPECIFICATIONS. SEAL JOINT WITH HOT POURED ASPHALT SEALANT FROM ODOT QPL.

⑤ CONTRACTOR IS RESPONSIBLE FOR MAINTAINING ALL ASPHALT AND CURBS OUTSIDE OF THE MAXIMUM TRENCH RESURFACING WIDTHS SHOWN. THE CITY MAKES NO CLAIMS AS TO THE SOIL TYPES, CHARACTERISTICS OR TRENCH STABILITY. IT IS THE CONTRACTOR'S RESPONSIBILITY TO DETERMINE PROPER TRENCH EXCAVATION AND PROTECTION METHODS. THE CITY IS NOT RESPONSIBLE FOR DAMAGES RESULTING FROM IMPROPER REMOVAL OF SHORING OR FROM FAILURE TO SHORE.

TRENCH RESURFACING DETAIL 7/3
NTS

MAXIMUM TRENCH RESURFACING WIDTH	
PIPE ø	RESURFACE WIDTH
12"	4.5'
18"	5.5'
24"	7'
30"	8'

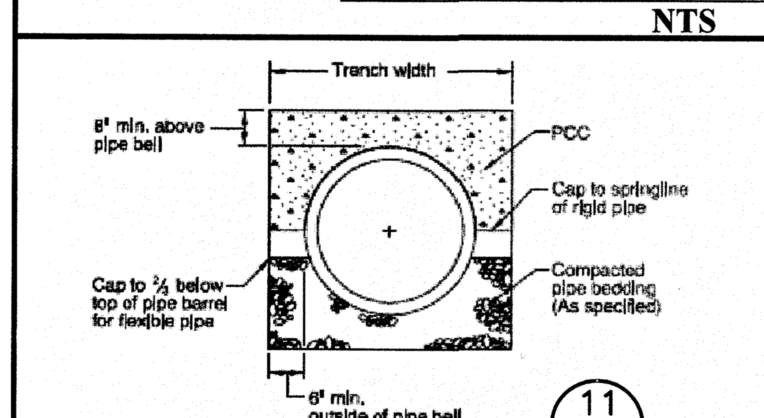

CAP DETAIL 11/3

CALL BEFORE YOU DIG !
ONE CALL: (800) 332-2344
OAR 952-001-0010 THROUGH
OAR 952-001-0090

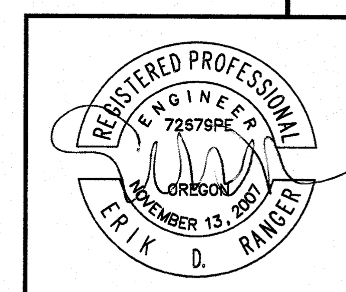

EXPIRES: 12/31/2016

Rev.	Date	Dwg	Description

i.e. ENGINEERING
809 SE Pine Street
Roseburg, Oregon 97470
PHONE (541) 673-0166
FAX (541) 440-9392
iemail@ieengineering.com

Project Name:
FAIRMOUNT
STORM SEWER IMPROVEMENTS

Title:
STANDARD DETAILS

DES	EDR	PROJECT NO. 149-194
DWG	DTM	DATE: APRIL 07, 2016
CHK	EDR	SCALE: AS SHOWN
APP	EDR	SHEET: 3 OF 5

DO NOT DUPLICATE

Drafter Apr 08, 2016 Z:\JOBS\0149-City of Roseburg\149-194 Fairmount-Garden Valley Drainage Improvements\CADD\CONSTRUCTION\149-194_C-DET.dwg

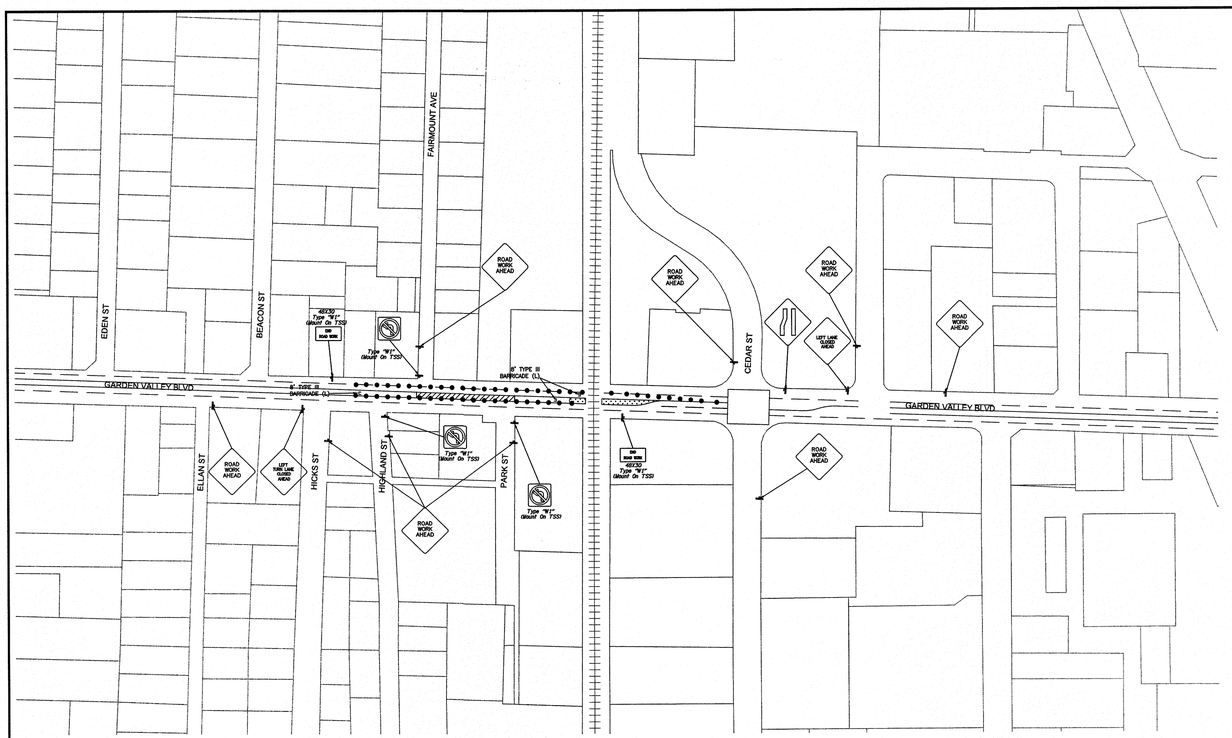

STAGE 1

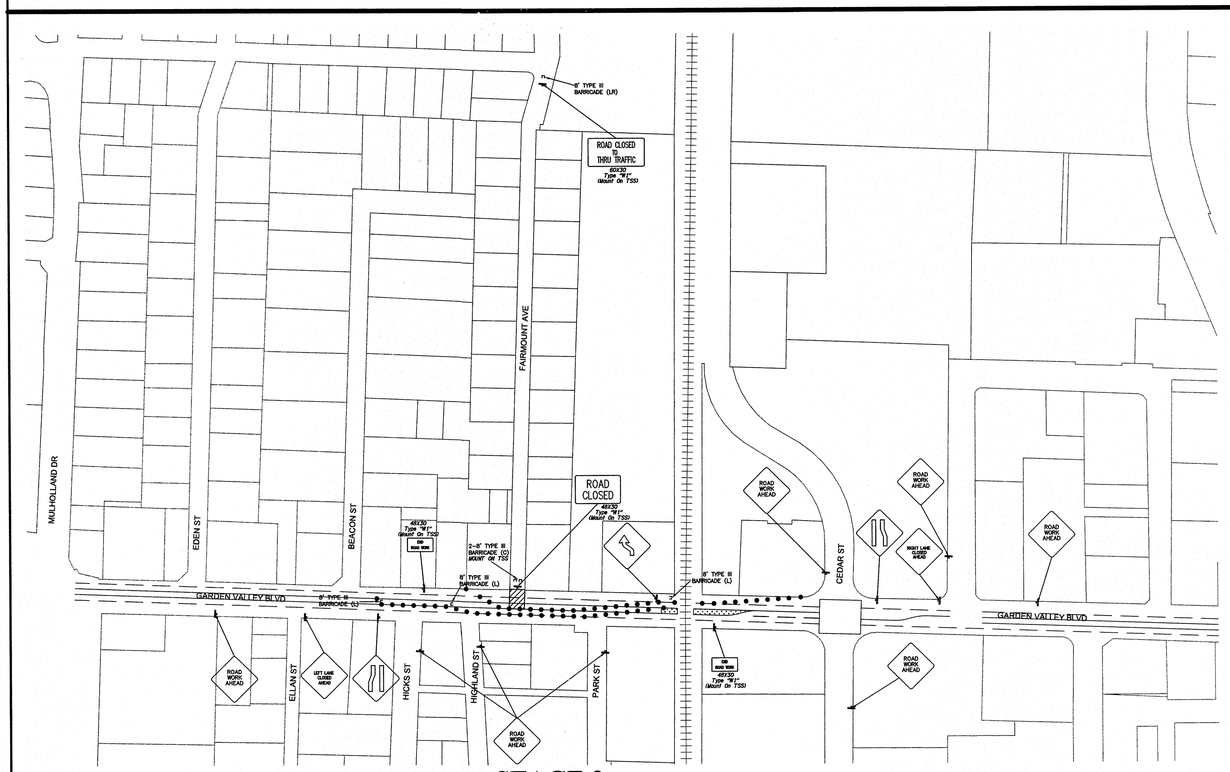

STAGE 2

STAGE 3

GENERAL NOTES:

1. THE SIGNAGE SHOWN IS THE EXPECTED MINIMUM SIGNAGE REQUIRED. CONTRACTOR TO MODIFY AS REQUIRED.
2. LOCATIONS OF TRAFFIC CONTROL DEVICES SHOWN ARE APPROXIMATE. CONTRACTOR TO LOCATE THE TRAFFIC CONTROL DEVICES PER FIELD CONDITIONS.
3. CONTRACTOR IS RESPONSIBLE FOR MONITORING TRAFFIC CONTROL DEVICES THROUGHOUT THE DAY AND IS TO MODIFY AS REQUIRED FOR SAFETY AND MAINTAINING ACCESS.
4. ALL WORK IN GARDEN VALLEY BLVD TO BE "NIGHT WORK", BETWEEN THE HOURS OF 7:00PM TO 7:00AM. ALL WORK OUTSIDE OF GARDEN VALLEY BLVD TO BE "DAY WORK", BETWEEN THE HOURS OF 7:00AM TO 7:00PM.
5. ALL LANES TO BE OPENED OUTSIDE OF WORKING HOURS.
6. THERE IS NO STAGING OF EQUIPMENT OR MATERIALS OR PARKING OF VEHICLES OUTSIDE OF WORKING HOURS ALLOWED WITHIN PUBLIC RIGHT-OF-WAY. CONTRACTOR IS RESPONSIBLE FOR FINDING STAGING AREAS.
7. ALL TRENCHES IN GARDEN VALLEY BLVD AND IN FAIRMOUNT UP TO 50' NORTH OF GARDEN VALLEY CURB LINE TO BE PLATED OR TEMPORARILY PATCHED WITH 2" OF ASPHALT UNTIL PERMANENT RESURFACING IS COMPLETED. ANY PLATTING SHALL BE REPAIRED BY CONTRACTOR. TEMPORARY SURFACING IS INCIDENTAL.
8. CONTRACTOR TO PROVIDE ALL SAFETY LIGHTING.

LEGEND:

- 28" TUBULAR MARKERS @ 10' SPACING (MAX)
- UNDER CONSTRUCTION
- SIGN
- BARRICADE

REGISTERED PROFESSIONAL ENGINEER 72670PE OREGON NOVEMBER 13, 2001 ERIK D. RANGER

EXPIRES: 12/31/2016

Rev.	Date	Dwg	Description

i.e. ENGINEERING
809 SE Pine Street
Roseburg, Oregon 97470
PHONE (541) 673-0166
FAX (541) 440-9392
email@ieengineering.com

Project Name:
FAIRMOUNT STORM SEWER IMPROVEMENTS

Title:
TRAFFIC CONTROL PLAN

DES	EDR	PROJECT NO. 149-194
DWG	DTM	DATE: APRIL 07, 2016
CHK	EDR	SCALE: AS SHOWN
APP	EDR	SHEET: 4 OF 5

DO NOT DUPLICATE

Drafter Apr 08, 2016 Z:\JOBS\0149-City of Roseburg\149-194 Fairmount-Garden Valley Drainage Improvements\CADD\CONSTRUCTION\149-194-TM.dwg

tm820.dgn 01-JAN-2015

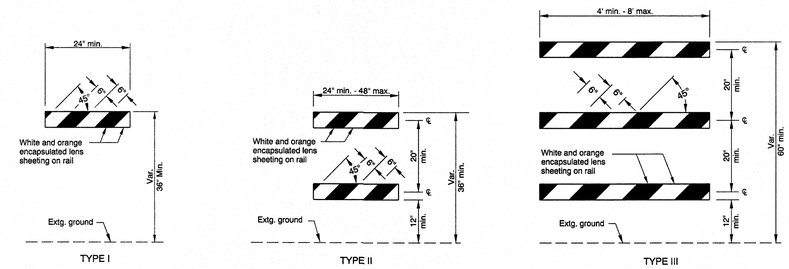

BARRICADE RAIL LAYOUT

GENERAL NOTES FOR ALL DETAILS:

- All non-reflectorized surfaces shall be white.
- Sandbags (approximately 25 lb sack filled with sand) may be placed on lower frame to provide additional ballast.
- Ballast shall not extend above bottom rail or be suspended from barricade.
- For rails less than 36" long, 4" wide stripes shall be used.
- Rails must be 8" min. to 12" max. in height.
- Use barricades from ODOT Qualified Products List (QPL).
- Use 4' Type III barricades where horizontal space is limited.
- Do not block bike lanes or shoulders unless the facility is properly closed and signed.
- Do not place barricades in sidewalks unless sidewalk is closed and signed according to the TCP. See Dwg. No. TM 844

NOTES:

- Markings for barricade rails shall slope downward at an angle of 45° in the direction traffic is to pass.
- Where a barricade extends entirely across a roadway, it is desirable that the stripes slope downward in the direction toward which traffic must turn in detouring.
- Where both right and left turns are provided for, slope the chevron striping downward in both directions from the center of the barricade.
- For full roadway closures, the C or LR barricade may be used. Extend barricades completely across roadway unless access is required for local road users.

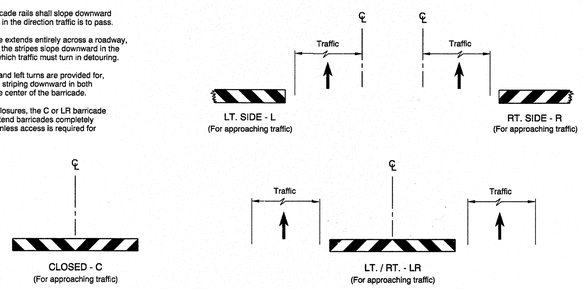

DIAGRAM FOR BARRICADE PLACEMENT AND SLOPE MARKING

Barricade
Barricade type
Indicates barricade placement on the roadway
B(III)R

BARRICADE NOTATION

CALC. BOOK NO. N/A	BASELINE REPORT DATE 01-JAN-2015
The selection and use of this Standard Drawing, while designed in accordance with generally accepted engineering principles and practices, is the sole responsibility of the user and should not be used without consulting a Registered Professional Engineer.	NOTE: All material and workmanship shall be in accordance with the current Oregon Standard Specifications OREGON STANDARD DRAWINGS TEMPORARY BARRICADES 2015

DATE	REVISION DESCRIPTION
01-01-2016	REVISED DRAWING AND NOTES

TM820

Effective Date: June 1, 2016 - November 30, 2016

tm821.dgn 01-JAN-2016

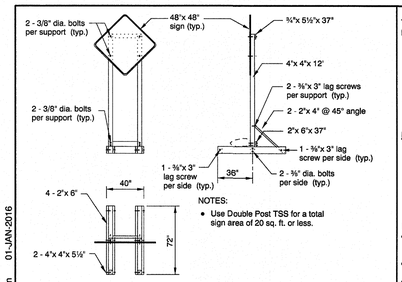

NOTES:

- Use Double Post TSS for a total sign area of 20 sq. ft. or less.

DOUBLE POST
TEMPORARY SIGN SUPPORT (TSS)

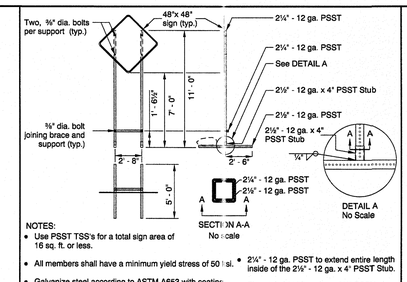

NOTES:

- Use PSST TSS's for a total sign area of 16 sq. ft. or less.
- All members shall have a minimum yield stress of 50 ksi.
- Galvanize steel according to ASTM A653 with coating designation G90. Remove Galvanizing from steel before welding. Repair Galvanizing according to ASTM A780.
- Use A325 Bolts or equivalent.
- 2¼" - 12 ga. PSST to extend entire length inside of the 2½" - 12 ga. x 4" PSST Stub.
- Do not use bolt to secure 2¼" PSST inside of the 2½" - 12 ga. x 4" PSST Stub.
- Weld steel according to AWS D.1.1.

PERFORATED STEEL SQUARE TUBE (PSST)
TEMPORARY SIGN SUPPORT (TSS)

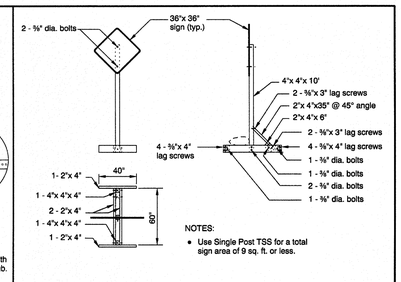

NOTES:

- Use Single Post TSS for a total sign area of 9 sq. ft. or less.

SINGLE POST
TEMPORARY SIGN SUPPORT (TSS)

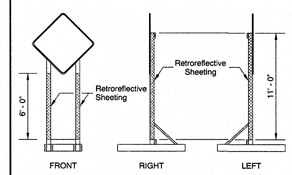

DOUBLE POST
TEMPORARY SIGN SUPPORT (TSS)

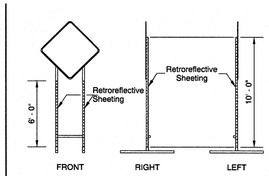

PERFORATED STEEL SQUARE TUBE (PSST)
TEMPORARY SIGN SUPPORT (TSS)

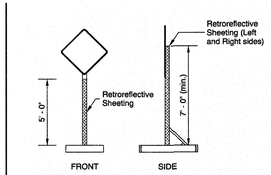

SINGLE POST
TEMPORARY SIGN SUPPORT (TSS)

TEMPORARY SIGN SUPPORT GENERAL NOTES:

- DO NOT TIP OVER TSS AT ANY TIME.
- For wooden TSS's, use either Douglas Fir or Hem Fir, which is surfaced four sides (S4S) and free of heart center (FOHC).
- See "Temporary Sign Placement" detail on TM822 for sign installation heights.
- Do not place or stack ballast more than 24" above the ground.
- When sign is inconsistent with current work zone conditions, cover sign: or turn sign 90 degrees away from approaching traffic. Remove TSS from roadway when signing is not needed for more than 3 days.
- Place a minimum of 50 lbs of sandbags on each of the four TSS supports legs. (25 lb. max per bag) (min. 100 lbs per side of each TSS)

NOTES:

- Apply flourescent orange, ANSI Type VIII or IX retroreflective sheeting to TSS posts, as shown, for all temporary signs, except "STOP" and "DO NOT ENTER". For "STOP" and "DO NOT ENTER" signs, used red ANSI Type III or IV retroreflective sheeting on the TSS posts.
- Apply sign post retroreflectivity to each TSS post facing front; and to the left and right sides of the TSS, as shown.
- Sheeting may be applied directly to post material; or applied to a rigid, lightweight substrate, then securely attached to the posts.

SIGN POST REFLECTIVE SHEETING PLACEMENT

CALC. BOOK NO. N/A	BASELINE REPORT DATE 01-JAN-2016
The selection and use of this Standard Drawing, while designed in accordance with generally accepted engineering principles and practices, is the sole responsibility of the user and should not be used without consulting a Registered Professional Engineer.	NOTE: All material and workmanship shall be in accordance with the current Oregon Standard Specifications OREGON STANDARD DRAWINGS TEMPORARY SIGN SUPPORTS 2015

DATE	REVISION DESCRIPTION
07-01-2016	REVISED NOTES
01-01-2016	REVISED NOTES AND DRAWING

TM821

Effective Date: June 1, 2016 - November 30, 2016

REGISTERED PROFESSIONAL ENGINEER
E. 72579PE - 8
OREGON
NOVEMBER 13, 2007
ERIK D. RANGER
EXPIRES: 12/31/2016

Rev.	Date	Dwg	Description

i.e. ENGINEERING
809 SE Pine Street
Roseburg, Oregon 97470
PHONE (541) 673-0166
FAX (541) 440-9392
iemail@ieengineering.com

Project Name:
FAIRMOUNT
STORM SEWER IMPROVEMENTS

Title:
TRAFFIC CONTROL DETAILS

DES	EDR	PROJECT NO. 149-194
DWG	DTM	DATE: APRIL 07, 2016
CHK	EDR	SCALE: AS SHOWN
APP	EDR	SHEET: 5 OF 5

DO NOT DUPLICATE

Drafter Apr 08, 2016 Z:\JOBS\0149-City of Roseburg\149-194 Fairmount-Garden Valley Drainage Improvements\CADD\CONSTRUCTION\149-194-TM.dwg