CONTRACT DOCUMENTS
FOR THE
CONSTRUCTION OF

STEWART PARK PAVILION RENOVATION
PROJECT NO. 19GR20

CITY OF ROSEBURG
PUBLIC WORKS DEPARTMENT
DOUGLAS COUNTY, OREGON

PREPARED BY:
City of Roseburg
900 SE Douglas Ave
Roseburg, OR 97470
541-492-6730

TABLE OF CONTENTS

ADVERTISEMENT FOR BID 2
INVITATION TO BID 3
INFORMATION TO BIDDERS 5
BIDDER'S CHECK LIST 12
BID FORM 14
STANDARD BID BOND 19
FIRST TIER SUBCONTRACTOR DISCLOSURE FORM INSTRUCTIONS 20
FIRST TIER SUBCONTRACTOR DISCLOSURE FORM 21
EMPLOYEE DRUG TESTING PROGRAM 22
PAY EQUITY COMPLIANCE TRAINING 23
PUBLIC WORKS BOND - PRE-BID NOTICE AND CERTIFICATION 24
CONSTRUCTION CONTRACT 25
STANDARD CONTRACT PROVISIONS 28
PUBLIC WORKS BOND FILING CERTIFICATION 35
STANDARD PERFORMANCE BOND 36
PAYMENT BOND 38
LOWEST BIDDER RESPONSIBILITY DETERMINATION FORM 40
PREVAILING WAGE RATES FOR PUBLIC WORKS CONTRACTS 42
GENERAL CONDITIONS 43
STANDARD DRAWINGS 83

CITY OF ROSEBURG
ADVERTISEMENT FOR BID

Project Name: Stewart Park Pavilion Renovation
Project Number: 19GR20
Project Description: The proposed work generally consists of furnishing all labor, equipment, materials and supervision for the renovation project. Work will include the demo of two existing stone fireplaces, removal and replacement of two trusses and associated roof purlins and sheeting. Project will also include the removal the existing tile roofing and installation of new standing seam metal roofing and electrical lighting upgrades.

Bids are due by 2:00 p.m. on Thursday August 6, 2020
All bids will be opened at 2:00 p.m.
Additional forms disclosing first tier subcontractors are due by 4:00 p.m.
No bids shall be received after this date and time.

Contact – Submit bids to:
City of Roseburg City Recorder
900 SE Douglas
Roseburg OR 97470
(541) 492-6866

Address Technical Questions to:
Ryan Herinckx
900 SE Douglas Ave
Roseburg, OR 97470
(541)-492-6884
rherinckx@cityofroseburg.org

SOLICITATION DOCUMENTS: Solicitation documents, including contract terms, conditions, specifications, all attachments and/or addenda for the Invitation to Bid are available for review at the above contact address. Bid documents will not be mailed to prospective bidders, but may be downloaded from the Oregon Procurement Information Network (ORPIN) through the following internet address: http://orpin.oregon.gov/open.dll/welcome. Bidders without access to ORPIN may download the documents at a Plan Center or the City of Roseburg's website at www.cityofroseburg.org under "Bidding Opportunities."

Bidders are not required to be pre-qualified to submit bids on this project. Bidders must be licensed with the Oregon Construction Contractors Board and comply with City of Roseburg Municipal Code.

The resulting public works contract is subject to ORS 279C.800 to 279C.870 or the Davis-Bacon Act (40 U.S.C. 3141 to 3148). No bid will be considered unless the bid contains a statement that the bidder will comply with the provisions of ORS 279C.840 (Prevailing Wage Rates).

INVITATION TO BID

The City of Roseburg will receive sealed bids marked **"Bid for STEWART PARK PAVILION RENOVATION, Project No. 19GR20** until the hour of 2:00 p.m. on **Thursday, August 6, 2020**, at which time they will be publicly opened and read. When required by ORS 279C.370, bidders must submit a list of their first-tier subcontractors providing labor, or labor and materials, no later than 4:00 p.m. that same day. Bids shall be addressed and delivered to Amy L. Sowa, City Recorder, City Hall, 900 SE Douglas Avenue, Roseburg, Oregon 97470. Any and all bids received after the 2:00 p.m. deadline for submission, or for which the list of first-tier subcontractors has not been submitted by 4:00 p.m. that same day, shall be considered nonresponsive and returned to the bidder. All bidders must list their "Construction Contractors Board" or "State Landscape Contractors Board" license number as required by ORS 701.021 or 671.530 on the bid form.

The proposed work generally consists of furnishing all labor, equipment, materials and supervision for the renovation project. Work will include the demo of two existing stone fireplaces, removal and replacement of two trusses and associated roof purlins and sheeting. Project will also include the removal the existing tile roofing and installation of new standing seam metal roofing and electrical lighting upgrades.

The bids will be evaluated as unit price pursuant to OAR 137-049-0380(2)(b).The proposed work will require the bidder to meet the highest standards prevalent in the industry or business related to the work to be performed. Failure to meet such standards may result in a reduction or withholding of payment; require bidder to provide, at bidder's own expense, additional work required to meet such standards; or termination of the contract, with damages being sought. Technical questions regarding the work to be performed should be addressed to:

Ryan Herinckx
City of Roseburg
900 SE Douglas Ave
Roseburg, OR 97470
541-492-6730
rherinckx@cityofroseburg.org

Bids must be accompanied by a certified check, cashier's check, irrevocable letter of credit or Bid Bond in an amount equal to not less than ten percent (10%) of the total amount of the bid. Bidders shall state as part of the bid that the provisions of ORS 279C.800 to 279C.870 (Prevailing Wage Rates) shall be complied with; provided however, if the project is subject to the federal prevailing rates of wage under the Davis-Bacon Act (40 U.S.C. 3141 et seq.) or if the project is subject to both the state and federal prevailing rates of wage, the bid must contain a statement by the bidder that contractor and every subcontractor shall pay the higher of the applicable state or federal prevailing rate of wage to all workers on the project. Bidders must also certify as part of the bid that the requirements of ORS 279C.505(2) (Employee Drug Testing Program) shall be complied with. Bidders are not required to be pre-qualified to submit a bid on this project. Each bid must contain a statement as to whether the bidder is a resident bidder, as defined in ORS 279A.120. Bidders are not required to be licensed under ORS 468A.720 (Asbestos Abatement). However, the successful bidder shall at all times during the project provide qualified staff on site that is able to identify asbestos containing material.

Bidders are hereby notified there are underground pipelines and structures containing asbestos within the City of Roseburg. If any such material is encountered during the project, the bidder shall thereupon be required to notify the City and comply with all requirements of applicable laws and regulations. Unless exempt under ORS 279C.800 to 279C.870, the successful bidder must file a $30,000 Public Works Bond with the Construction Contractors Board prior to beginning work on the project, and certify that all sub-contractors have also filed such bond. Bidders must agree to use recyclable products to the maximum extent financially feasible**. Bidders with 50 or more employees and for contracts over $500,000, are required to possess a certificate issued by the Department of Administrative Services for completion of pay equity training (NEW).**

The City of Roseburg may reject any bid not in compliance with all public bidding procedures and requirements, including the requirement to demonstrate the bidder's responsibility under ORS 279C.375(3)(b), may waive any irregularities, and may reject for good cause any or all bids upon a finding of the City it is the public interest to do so. The City may also cancel this invitation in accordance with OAR 137-049-0270.

Dated this 15th day of July, 2020.

CITY OF ROSEBURG, DOUGLAS COUNTY, OREGON
/s/ Amy L. Sowa, City Recorder

INFORMATION TO BIDDERS

1. FORM OF BID

All bids must be made upon the blank Bid Form attached hereto and must give a price for each item and an aggregate amount or a lump sum price as required in the Bid Form.

The City reserves the right to reject any or all bids or to accept the bid deemed in the best interest of the City. Without limiting the generality of the foregoing, the City may reject any bid which is incomplete, obscure or irregular; which omits any one or more items in the price sheet; in which unit prices are obviously unbalanced; or which is accompanied by an insufficient or irregular Bid Bond.

The bidder shall sign the Bid Form in the blank space provided therefore. All bids must contain the bidder's tax identification number. Bids made by a corporation, general or limited partnership, or L.L.C., shall contain the name and address of such organization, together with names and addresses of officers, partners or managing members. If the bid is made by a corporation, it must be signed by one of the corporate officers with the authority to sign for the corporation; if made by a partnership, by one of the partners.

All bids must be submitted at the time and place, and in the manner prescribed in the Invitation to Bid.

2. BID PROTEST; REQUEST FOR CHANGE OR CLARIFICATION

A bidder may protest, or request a change in items in the bid documents, including contract terms and conditions or specifications, by filing a written protest with the City not less than ten (10) calendar days prior to the bid submission deadline. Such written protest or request for change must include a detailed statement of the grounds for the protest and a statement of the desired changes to the contract terms and conditions or specifications.

The City shall not consider a bidder's protest or request for change after the deadline for submitting such protest or request. The City shall provide notice to the bidder if it entirely rejects the bidder's protest or request for change. If the City agrees with the bidder's protest or request, in whole or in part, the City shall issue a written Addendum to the bid documents or specifications.

Prior to the deadline for submitting a written protest or request for change, a bidder may request that the City clarify any provision of the bid documents. The City's clarification to a bidder, whether orally or in writing, shall not change the bid documents and is not binding on the City unless the City amends the bid documents by issuing a written addendum.

If a written addendum is issued by the City, all bidders must provide written acknowledgement, with their bids, of receipt of all issued addenda.

3. CONTRACT DOCUMENTS

The Contract Documents for this Project consist of, but are not necessarily limited to, the Invitation to Bid, Information to Bidders, Bid Form, Construction Contract including Exhibit "A" Standard City Contract Provisions, First-Tier Subcontractor Disclosure Form, Drug Testing Program Certification Form, Bidder's Responsibility Form, Performance Bond, Payment Bond, Public Works Bond Filing Certification form (when required), General Conditions, Technical Provisions, Special Conditions, Standard Drawings, Specifications and Plans and Supplemental Specifications, all as required for the full execution and satisfactory completion of the Project. Any person contemplating the submission of a bid and being in doubt as to the meaning or intent of said Contract Documents should request of the City, in writing, an interpretation thereof. Any interpretation of said Contract Documents shall be made only in writing by the City.

4. ESTIMATE OF QUANTITIES

The estimate of quantities of work to be done as stated in the Bid Form, although stated with as much accuracy as possible, is approximate only and is assumed solely for the purpose of comparing bids. The quantities on which payments will be made to the Contractor are to be determined by measurement of the work actually performed and paid at the unit price bid, regardless of the amount of increase or decrease in the estimated quantities as specified in the Contract Documents. The City reserves the right to increase or diminish the amount of any class of work as may be deemed necessary.

5. CONSTRUCTION CONTRACTORS' BOARD - STATE LANDSCAPE CONTRACTORS' BOARD

All contractors bidding on public contracts must be licensed with the Construction Contractors' Board or the State Landscape Contractors Board as required by ORS 701.021 or 671.530. Bids must be identified with the Contractors' Board license number. No bids will be considered without this information.

6. DISCLOSURE OF FIRST-TIER SUBCONTRACTORS

When a public improvement contract value is greater than $100,000, all bidders are required to disclose information about first-tier subcontractors, providing labor or labor and materials, when the contract amount of such first-tier subcontractor is equal to or greater than:

1) 5% of the project bid, or $15,000, whichever is greater; or
2) $350,000 regardless of the percentage of the total bid.

Bidders must disclose the following information about such subcontracts, on the First-Tier Subcontractor Disclosure Form provided by the City and included herein, within two hours of the bid submission deadline:

1) The subcontractor's name;
2) The subcontract dollar value; and

3) The category of work to be performed by the subcontractor.

Any bidder not using subcontractors subject to the above disclosure form, must write "NONE" on the Disclosure Form and sign and submit the form. The City will reject a bid if the bidder fails to submit the Disclosure Form before the deadline.

7. DRUG TESTING PROGRAM

ORS 279C.505(2) requires public improvement contracts to include a provision requiring contractors to demonstrate that they have an employee drug and alcohol testing program in place. All bidders are required to certify, on the Drug Testing Program Certification Form provided by the City and included herein, that they have such program in place. This certification will become part of the Contract if awarded and contractor will be required to maintain such program throughout the performance of the Contract. Failure to maintain a program shall constitute a material breach of the Contract.

8. PROMPT PAY POLICY - TIMELY PROGRESS PAYMENTS

ORS 279C.570 and 279C.580 require prompt payment to contractors and subcontractors and provides for settlement of compensation disputes between the parties. The City is required to automatically calculate and pay interest on invoices from the contractor when payments become overdue. The interest commences thirty (30) calendar days after receipt of the invoice from the contractor, or fifteen (15) calendar days after the payment is approved by the City, whichever is earlier. The rate of interest charged to the City on the amount due shall equal three times the discount rate on 90-day commercial paper, but shall not exceed 30 percent.

The City is also required to ensure that the contractor includes a clause in each subcontract that obligates the contractor to pay first-tier subcontractors for satisfactory performance under its contract. Contractors must pay subcontractors within ten (10) calendar days of receiving payment from the City. Contracts between primary contractors and subcontractors must also contain an interest penalty clause that obligates the contractor, if payment is not made to the subcontractor within thirty (30) calendar days after receipt of payment from the City, to pay the first-tier subcontractor an interest penalty on amounts due in the case of each payment not made in accordance with the subcontract payment clause. The contractor is also required to ensure that first-tier subcontractors include these requirements in each of its subcontracts with lower-tier subcontractors or suppliers.

If requested in writing by a first-tier subcontractor, within ten (10) calendar days after receiving the request, the contractor must provide the first-tier subcontractor, a copy of that portion of any invoice or request for payment submitted to the City, or pay document provided by the City to the contractor, specifically related to any labor or materials supplied by the first-tier subcontractor.

9. PRE-QUALIFICATION OF BIDDERS

When required, bidders shall pre-qualify under ORS 279C.430 and 279C.435, and shall submit the information requested on the form furnished by the City. This information

shall be submitted at least ten (10) calendar days prior to the date of bid opening. Bidder qualifications are approved on a calendar year basis and must be renewed annually by filing a new pre-qualification application and obtaining approval after January 1 of each year. The City will accept the approval of qualifications granted from the Department of Transportation and the Department of Administrative Services, including the time periods used by those agencies.

10. BID BOND, PUBLIC WORKS BOND, PAYMENT BOND AND PERFORMANCE BOND

A Bid Bond, Public Works Bond Filing Certification, Payment Bond and Performance Bond shall be provided as specified in Subsection 5.4 of the General Conditions. No waivers, special requirements or emergency provisions have been established for this Contract.

11. PAY EQUITY COMPLIANCE CERTIFICATION (NEW)

Businesses with fifty (50) or more employees, and a contract valued at more than $500,000, must provide proof they are properly trained on Oregon's pay equity laws. A certificate proving the contractor has completed the training shall be provided as specified in Subsection 26 of the "Bid Form".

12. HIGHEST STANDARDS OF WORK AND CONSEQUENCES FOR FAILURE

The work to be performed must meet the highest standards prevalent in the industry or business most closely related to the work to be performed. Failure to meet such standards may result in consequences including, but not limited to a reduction or withholding of payment; a requirement that bidder perform, at bidder's own expense, additional work required to meet such standards; or termination of the contract, with damages being sought.

13. CONDITIONS OF WORK

Bidders must make their own determination of the nature of the work proposed under this Contract, the local conditions which can be encountered in this area, and all other matters which can in any way affect the work proposed under this Contract. It shall also be the bidder's responsibility to be thoroughly familiar with the Contract Documents. Failure to make the examination necessary for this determination or to examine any form, instrument or document of the Contract shall not release the bidder from the obligations of this Contract.

14. REVIEW OF BIDS; BASIS FOR AWARD; NOTICE OF INTENT TO AWARD; AND RIGHT TO PROTEST AWARD

In reviewing all bids received and determining the lowest responsible bidder, the City reserves the right to take into account and give reasonable weight to the extent of the bidder's experience on work of the nature involved, on the bidder's record as to dependability in carrying out of contracts, and evidence of present ability to perform the Contract in a satisfactory manner.

The City may make such investigations as deemed necessary to determine the ability of the bidder to perform the work, and the bidder shall furnish to the City all such information and data for this purpose as the City may request. The City reserves the right to reject any bid if the evidence submitted by, or investigation of, such bidder fails to satisfy the City that such bidder is properly qualified to carry out the obligations of the Contract, to complete the work contemplated therein, and to do so in a timely manner. The City specifically reserves the right to reject a bid from a bidder who, at the time bids are opened, has failed to complete work in a timely manner under a contract previously awarded to the bidder by the City. Conditional bids will not be accepted.

In accordance with ORS 279A.120(2)(b), in determining the lowest responsible bidder, the City shall, for the purpose of awarding the Contract, add a percentage increase on the bid of a non-resident bidder equal to the percent, if any, of the preference given to that bidder in the state in which the bidder resides.

Within forty-five (45) calendar days after the bid opening, the City will accept one of the bids or reject all of the bids received. If the City intends to accept one of the bids, it shall issue a Notice of Intent to Award the Contract to all bidders. The City's award will not be final until seven (7) calendar days after the date of the notice if no protest is filed; or if a protest is filed, until the City provides a written response to all timely-filed protests that denies the protest and affirms the award.

A bidder may submit a formal written protest to the City's Notice of Intent to Award the Contract within seven (7) calendar days of the date of the City's Notice of Intent. The written protest must specify the grounds upon which the protest is based and must show that the protesting party is an adversely affected or aggrieved bidder. A bidder is adversely affected or aggrieved only if the bidder is eligible for award of the Contract as the responsible bidder submitting the lowest responsible bid, is next in line for award and claims that all lower bidders are ineligible for award in accordance with law.

Such protest must be submitted to the City Recorder, 900 SE Douglas, Roseburg, OR 97470. Any protest received after the 7-day deadline will not be considered. The City Recorder shall forward such protest to the City Manager who shall have the authority to settle or resolve the protest by written decision.

15. EXECUTION OF CONTRACT, BONDS AND DAMAGES FOR FAILURE TO EXECUTE

The bidder whose bid is accepted will be required to appear within ten (10) calendar days after notice that the Contract has been awarded to bidder and to execute the Contract with the City for the full and complete performance of all work specified, and as required by Subsection 5.4 of the General Conditions, deliver the Public Works Bond Filing Certification form, the Payment Bond to assure payment of the obligations incurred in the performance of the Contract and the Performance Bond and to ensure performance of the Contract.

Should the successful bidder fail or refuse to execute the Contract and furnish the Public Works Bond Filing Certification form, Payment Bond and/or Performance Bond when

required, then the Bid Bond deposited by said bidder shall be retained by the City as liquidated damages.

16. COMMENCEMENT DATE AND EXPIRATION DATE OF CONTRACT

This Contract shall be in effect from the time the Contract is signed until the Project is completed. The Contractor must be capable of commencing construction on the work contemplated in the Contract Documents within ten (10) calendar days after the execution of the Contract and receipt of the City's notification to proceed and shall complete the same within the time specified in the bid.

17. DURATION OF BIDS; RETURN OF BID BONDS

All bids will be binding until the later of:

1) the day the contract is executed; or
2) sixty (60) calendar days after the date of bid opening.

Bid bonds will be returned to unsuccessful bidders not later than the date on which the bids are no longer binding.

18. PUBLIC RECORDS

These Contract Documents and each bid received in response to it, together with copies of documents pertaining to the award of a contract shall be kept on file as a public record by the City Recorder; provided however, such records shall not be disclosed until after the notice of intent to award the contract has been issued.

19. RECORDS REVIEW; CONFIDENTIALITY

After notice of intent to award the resulting contract has been issued, all bids shall be available for public inspection except for those portions of a bid that the bidder designates in its bid as trade secrets or as confidential proprietary data in accordance with applicable state law. If the City determines such designation is not in accordance with applicable law, the City shall make those portions available for public inspection. The bidder shall separate information designated as confidential from other non-confidential information at the time of submitting its proposal. Prices, makes, models or catalog numbers of items offered, scheduled delivery dates and terms of payment are not confidential, and shall be publicly available regardless of a bidder’s designation to the contrary.

20. MATERIALS CONTAINING ASBESTOS

Materials containing asbestos may be present in underground pipe systems. All appropriate Federal, State, County and Municipal rules, regulations and guidelines must be followed when working with asbestos containing material. Non friable material must be handled, transported and disposed of in a way that prevents it from becoming friable and releasing asbestos fibers. If AC pipe is shattered, damaged or badly weathered, it is considered to be friable and will likely release asbestos fibers. A DEQ licensed

asbestos abatement contractor using DEQ certified workers must remove all friable asbestos material. Any and all permits and fees that are required by the DEQ, Douglas County and any other regulatory agency must be obtained and paid for by the Contractor prior to disposing of the asbestos containing material. For information about asbestos rules, contact the DEQ Western Region office in Medford, Oregon.

BIDDER'S CHECK LIST

Bidder's attention is called to the following forms, which must be executed in full as required with the bid:

A. **BID FORM(S):** Each bidder shall complete the bid form(s). Prices must be shown in the spaces provided and must be expressed in figures.

B. **BID BOND:** This form is to be executed by bidder and bidder's Surety. The amount of cash, certified check, cashier's check, irrevocable letter of credit or Bid Bond shall not be less than 10% of the total Bid amount.

C. **FIRST-TIER SUBCONTRACTOR DISCLOSURE FORM:** When required by law, this form must be submitted by the bid submission deadline, at which time bids will be opened and read, or within two (2) working hours of such submission deadline. If no subcontractors for labor or for labor and materials will be used, the bidder must write "NONE" on the disclosure form, sign and submit the form as required. Failure to submit this form within two hours of the bid submission deadline will result in the bid becoming non-responsive and such bid will be returned to the bidder.

D. **DRUG TESTING PROGRAM CERTIFICATION FORM:** This form must be submitted with the bid to demonstrate that bidder has an employee drug and alcohol testing program in place and will continue to keep the program in place throughout the duration of performing the Contract awarded.

E. **PUBLIC WORKS BOND PRE-BID NOTICE & CERTIFICATION FORM:** This form must be submitted with the bid to demonstrate contractor's awareness of and intended compliance with the requirement to file a Public Works Bond with the Construction Contractors Board prior to beginning work on the project if awarded the bid.

F. **PAY EQUITY COMPLIANCE CERTIFICATION FORM (NEW): If applicable pursuant to Section 11 of "Information for Bidders",** this form must be submitted with the bid to demonstrate contractor has completed required training regarding pay equity and the prohibition against discrimination in compensation or wage benefits.

The following forms are to be executed after the Contract is awarded, prior to beginning work on the project:

A. **CONSTRUCTION CONTRACT:** This agreement is to be executed by the successful bidder.

B. **PERFORMANCE BOND AND PAYMENT BOND:** Both a Performance Bond and a Payment Bond are to be executed by the successful bidder and bidder's Surety Company and submitted at the time the Contract is executed.

C. **PUBLIC WORKS WAGE CERTIFICATION FORM:** This form is to be completed in accordance with state law and submitted monthly during the duration of the contract, by the fifth business day of the following month, with request for payment.

D. **CERTIFICATE OF INSURANCE:** This certificate is to be executed by the successful bidder and bidder's insurance company and submitted at the time the Contract is executed.

E. **PUBLIC WORKS BOND FILING CERTIFICATION:** This form is to be executed by the successful bidder and submitted at the time the Contract is executed to certify if

Contractor has filed the required Public Works Bond or elected not to file the Bond due to qualifying under ORS 200.055.

BID FORM

City of Roseburg
900 SE Douglas Avenue
Roseburg, Oregon 97470

The undersigned bidder has carefully examined the Contract Documents for the construction of the

STEWART PARK PAVILION RENOVATION
19GR20

referred to in the Invitation to Bid dated July 15, 2020, inviting bids on such Project and also the site of the Project. Bidder will provide all necessary labor, equipment, tools, apparatus and other means of construction, do all the work and furnish all the materials called for by said Contract Documents in the manner prescribed therein to provide a complete Project.

The undersigned bidder understands that the quantities of work as shown herein are approximate only, unless noted otherwise, and are subject to increase or decrease. The bidder offers to perform the work, at the unit price stated in the following schedule, whether the quantities are increased or decreased.

Schedule A - Base Bid					
Item No.	Description	Unit	Estimated Quantity	Unit Cost	Total Cost
A-1	Mobilization	LS	1		
A-2	Demolition/Shoring	LS	1		
A-3	Rough Framing	LS	1		
A-4	Metal Roofing/Flashing	LS	1		
A-5	Glazing (skylights)	LS	1		
A-6	Fascia Trim Replacement	LF	315		
A-7	19/32" Roof Sheeting Replacement 4'x8', outside the scope of structural work	EA	20		
				Schedule A Bid Item Total:	

Schedule B - Additive Alternate					
Item No.	Description	Unit	Estimated Quantity	Unit Cost	Total Cost
B-1	Electrical Lighting Upgrades & Blocking	LS	1		
				Schedule B Bid Item Total:	

Schedule C - Deductive Alternate					
Item No.	Description	Unit	Estimated Quantity	Unit Cost	Total Cost
C-1	GAF HDZ Roofing System (Replaces Bid Item A-4)	LS	1		
			Schedule C Bid Item Total:		

*Abbreviations ***(Add other abbreviations as required for the project***):

LS – Lump Sum EA – Each LF – Lineal Feet

BIDS WILL BE EVALUATED ON THE SCHEDULE "A" BASE BID PRICE PLUS ANY OR ALL OF THE SCHEDULES CHOSEN BY THE OWNER. THE ORDER OF THE SCHEDULES LISTED ABOVE DOES NOT REPRESENT THE ORDER IN WHICH ANY OF THESE SCHEDULES MAY BE CHOSEN.

SCHEDULES LISTED IN THE BID FORMS WILL BE REVIEWED AND ACCEPTED OR REJECTED AT THE OWNERS OPTION. ACCEPTED SCHEDULES WILL BE IDENTIFIED IN THE CONSTRUCTION CONTACT. IF SCHEDULE C IS ACCEPTED IT WILL REPLACE BID ITEM A-4 IN THE BASE BID.

The undersigned also declares and agrees as follows:

1. That the only persons or parties interested in this bid are those named herein, that the bid is in all respects fair and without fraud, and that it is made without any connection or collusion with any person making another bid on this Contract.

2. That the bidder, and any subcontractor upon which the bidder is relying, have carefully examined and had an opportunity to comment on, the Contract Documents for the construction of the proposed improvements including a full set of the plans and specifications, including all addenda thereto; that bidder has personally inspected the contemplated construction area or areas; that bidder is satisfied as to the adequacy and completeness of the plans and specifications, the feasibility of the work described therein, quantities of materials, items of equipment and conditions of work involved, including the fact that the description of work and materials as included herein are approximate only; and that this bid is made according to the provisions and under the terms of the Specifications which are hereto attached and hereby made a part of this bid.

3. All of the Specifications and Plans which are listed herein have been examined by the undersigned bidder and the terms and conditions thereof are hereby accepted.

4. It is understood that the Plans may be supplemented by additional Drawings and Specifications in explanation and elaboration of the Plans and it is agreed that such Supplemental Drawings, when not in conflict with those referred to in Paragraph 3 above, will have the same force and effect as if completed and attached hereto, and that when received, will be considered a part of the Contract Documents.

5. It is understood that all work will be performed under the price schedule outlined herein and that all services, materials, labor and equipment and all work necessary to complete the Project in accordance with the Plans and Specifications shall be furnished for the prices named in the bid. If there is a change in the scope of work or work which cannot be properly classified under the price schedule then bidder agrees to do this work as "extra work". The undersigned bidder agrees to do any extra work and furnish materials, and to accept as full compensation therefore at such prices as may be agreed upon in writing by the City and the Contractor before extra work begins. Each party binds itself to agree to reasonable prices.

6. It is understood the work to be performed must meet the highest standards prevalent in the industry or business most closely related to the work to be performed. It is further understood that failure to meet such standards may result in consequences including, but not limited to, a reduction or withholding of payment; a requirement that bidder perform, at bidder's own expense, additional work required to meet such standards; or termination of the contract, with damages being sought.

7. The bidder agrees that if this bid is accepted, the bidder will, within ten (10) calendar days after the notification of acceptance, execute the Construction Contract with the City in the form of Contract specified, and will, at the time of execution of the Contract, deliver to the City the Performance Bond, Payment Bond and Public Works Bond Filing Certification form as required herein, and will furnish all the materials necessary to complete the Project in the manner, in the time and according to methods as specified in the Specifications and required by the City.

8. The cash, certified check, cashier's check, irrevocable letter of credit or Bid Bond shall be payable to the City to the extent of 10% of the amount of the bid in case this bid is accepted by the City and the undersigned shall fail or refuse to execute the Contract and furnish a Payment Bond, a Performance Bond or the Public Works Bond Filing Certification form as required by the Specifications within the time limit named therein after notification that said bid is accepted, all in accordance with the provisions of this bid and the Plans and Specifications which are a part hereof.

9. All items for the Contract for which forms are provided herein have been completed in full by the showing of prices for each and every item thereof, and for the showing of other information indicated by the Bid Form.

10. Bidder agrees to begin work within ten (10) calendar days after the execution of the Contract proposed herein and receipt of the City's notification to begin work and to complete work in all respects within **forty five (45)** calendar days after "Notice to Proceed" has been issued by the City. Anticipated issuance of Notice to Proceed will be October 1, 2020.

11. In the event the bidder is awarded the Contract and fails to complete the Project within the time limit or extended time agreed upon, as more specifically set forth in the General Conditions, liquidated damages shall be paid to or withheld by the City pursuant to Paragraph 4 of the Construction Contract (Time of Performance - Liquidated Damages)

at the rate of **five hundred Dollars ($500.00)** per day, until the Project has been completed as provided in the General Conditions.

12. The undersigned bidder hereby states, as part of this bid, that the applicable provisions of Oregon's Prevailing Wage Law (ORS 279C.800 to 279C.870) and the Federal Prevailing Wage Law (Davis-Bacon Act, 40 U.S.C. 3141-3148), shall be complied with. When the Project is subject to both the State and Federal Prevailing Wage Laws and rates, workers in each trade will be paid the higher of the two rates.

13. The undersigned bidder and bidder's subcontractors shall comply with ORS 656.017, which requires them to provide Workers' Compensation coverage for all their subject workers.

14. The undersigned bidder hereby states, as part of this bid, that bidder shall comply with ORS 279C.505(2) which requires bidder to have an employee drug testing program in place.

15. The undersigned bidder and bidders' subcontractors shall comply with ORS 279C.570 and 279C.580, which require timely progress payments for public improvement projects and provide interest penalties for late payment.

16. The undersigned bidder hereby states, as part of this bid, bidder and bidder's subcontractors shall comply with the provisions of Exhibit "A" - "Standard City Contract Provisions".

17. If the bidder is awarded the Contract for this work, the name and address of the Surety who will provide the Payment Bond, Performance Bond and Public Works Bond (if required) will be:_____.

18. The name and address of the bidder who is submitting this bid is: _____, which is the address to which all communications pertinent to this bid and the Contract shall be sent. The bidder's email address is:_____.

19. The names of the principal officers of the corporation submitting this bid or of the partnership, or of all parties interested in this bid as principals are as follows: _____.

20. The undersigned bidder acknowledges that Addenda No. _____ through _____ have been delivered to bidder and have been examined as part of the Contract Documents.

21. In the prosecution of this work, the bidder proposes to use the subcontractors listed on the First-Tier Subcontractor Disclosure Form presented within two working hours of the bid submission deadline as set forth in the Invitation to Bid. Any bidder not using subcontractors subject to the above referenced Disclosure Form shall indicate "NONE" on the Disclosure Form and sign and submit the form as required.

22. Declaration of Residency: I "am" or "am not" (circle one) a "resident bidder"* as defined by ORS 279A.120, a contractor that has paid unemployment taxes or income taxes in

Oregon during the 12 calendar months immediately preceding submission of the bid, has a business address in this state and has stated in the bid whether the bidder is a "resident bidder" pursuant to ORS 279A.120.

23. The bidder's Construction Contractors Board License Number or Landscape Contractors Board License Number is: _____.

24. Bidder's Tax Identification Number: _____. Email:_____.

25. Public Works Bond: If the bid is accepted, prior to beginning work on the project, the bidder will file with the Construction Contractors Board, a Public Works Bond in the amount of $30,000 with a corporate surety authorized to do business in the State of Oregon; and before permitting a subcontractor to begin work on the project, the bidder will verify that the subcontractor has also filed the aforementioned bond. If the bidder, as a certified disadvantaged, minority, women or emerging small business enterprise, elects not to file the Public Works Bond, bidder will file written verification of such certification with the Construction Contractors Board and provide the Board and the City of Roseburg with notice of such election.

26. **If applicable** pursuant to Section 11 of "Information for Bidders", the undersigned bidder hereby states, as part of this bid, that bidder has completed pay equity compliance training and received a certificate of completion from the Oregon Department of Administrative Services. **(NEW)**

If sole Proprietor or Partnership:

In witness hereto, the undersigned as set his/her hand this _____ day of _____, 2020.

Printed name of bidder:_____

Signature of bidder:

_____

Title:_____

If Corporation:

In witness whereof, the undersigned corporation has caused this instrument to be executed and its seal affixed by its duly authorized officers this ____ day of _____, 2020.

Name of Corporation:_____

Printed name of person signing:_____

Signature:_____

Title:_____

Attest: _____
Secretary

STANDARD BID BOND

We, _____, "as Principal,"
(Name of Principal)
and _____, an _____Corporation,
(Name of Surety)

authorized to transact Surety business in Oregon, as "Surety," hereby jointly and severally bind ourselves, our respective heirs, executors, administrators, successors and assigns to pay unto the City of Roseburg ("Obligee") the sum of ($_____) _____ dollars.

WHEREAS, the condition of the obligation of this bond is that Principal has submitted its proposal or bid to an agency of the Obligee in response to Obligee's procurement document (No. _____) for the project identified as:
_____ which proposal or bid is made a part of this bond by reference, and Principal is required to furnish bid security in an amount equal to ten percent (10%) of the total amount of the bid pursuant to the procurement document and ORS 279C.365(5) for competitive bidding or 279C.400(5) for competitive proposals.

NOW, THEREFORE, if the proposal or bid submitted by Principal is accepted, and if a contract pursuant to the proposal or bid is awarded to Principal, and if Principal enters into and executes such contract within the time specified in the procurement document and executes and delivers to Obligee its good and sufficient performance bond, payment bond and public works bond as required by Obligee within the time fixed by Obligee, then this obligation shall be void; otherwise, it shall remain in full force and effect.

IN WITNESS WHEREOF, we have caused this instrument to be executed and sealed by our duly authorized legal representatives this _____ day of _____, 2020.

PRINCIPAL: _____

By _____
Signature

_____
Official Capacity

Attest: _____
Corporation Secretary

SURETY: _____

BY ATTORNEY-IN-FACT:

_____
Name

_____
Signature

_____
Address

_____
City State Zip

_____
Phone Email

FIRST TIER SUBCONTRACTOR DISCLOSURE FORM INSTRUCTIONS

Instructions for First-Tier Subcontractor Disclosure:

Bidders are required to disclose information regarding certain first-tier subcontracts (ORS 279C.370). Specifically, when the contract amount of a first-tier subcontract furnishing labor or labor and materials would be great than or equal to: (1) 5% of the project bid, but at least $15,000; or (2) $350,000 regardless of the percentage, the bidder must disclose the following information about that subcontract either in its bids submission, or within two hours after bid closing:

(A) The subcontractor's name;

(B) The category of work that the subcontractor would be performing; and

(C) The dollar value of the subcontract.

If the bidder will not be using any subcontractors that are subject to the above disclosure requirements, the bidder is required to indicate "NONE" on the accompanying form.

THE CONTRACTING AGENCY MUST REJECT A BID IF THE BIDDER FAILS TO SUBMIT THE DISCLOSURE FORM WITH THIS INFORMATION BY THE STATED DEADLINE (OAR 137-049-0360).

**** The subject form is on the following page.***

FIRST TIER SUBCONTRACTOR DISCLOSURE FORM

PROJECT NAME: _____

BID#: _____

BID CLOSING: DATE: _____ **TIME:** _____

This form must be submitted at the location specified in the Invitation to Bid on the advertised bid closing date and within two working hours after the advertised bid closing time.

List below: the name of each subcontractor that will be furnishing labor or labor and materials and is required to be disclosed, the category of work that the subcontractor will be performing and the dollar value of the subcontract. Enter "NONE" if there are no subcontractors that need to be disclosed. (ATTACH ADDITIONAL SHEETS IF NEEDED)

NAME OF SUBCONTRACTOR	DOLLAR VALUE	CATEGORY OF WORK
_____	$_____	_____
_____	$_____	_____
_____	$_____	_____
_____	$_____	_____
_____	$_____	_____
_____	$_____	_____

Failure to submit this form by the disclosure deadline will result in a nonresponsive bid. A nonresponsive bid will not be considered for award.

Form submitted by (bidder name):_____

Contact name:_____ **Phone #:**_____

****

Form Received in the City Recorder's Office:

Time: _____ **Date:** _____ **By:** _____

EMPLOYEE DRUG TESTING PROGRAM
CERTIFICATION FORM

BIDDER'S NAME:_____

PROJECT NAME & NUMBER:_____

ORS 279C.505 (2) provides that every public improvement contract contain a condition that the Contractor shall demonstrate that an employee drug testing program is in place. The City's award of the Contract for which this certificate is required is conditioned, in part, upon the Bidder's demonstration of compliance with the provisions of ORS 279C.505(2). If the Bidder named above is awarded the Contract, this certificate shall become a part of, and shall constitute a continuing representation and warranty under, the Contract.

To induce the City to award the Contract to the Bidder, the undersigned, as the duly authorized representative of the Bidder, hereby represents and warrants, on behalf of the above named Bidder:

1. That Bidder has and enforces, and at all times during the term of the Contract will have and enforce, a written employee drug testing policy that at a minimum, requires compliance with the Oregon Department of Transportation Commercial Drivers License drug testing regulations;

2. A copy of the Bidder's current written employee drug testing policy will be available for inspection by the City at any time upon the City's request; and

3. The Bidder understands and agrees that its representations and warranties herein will become a continuing part of the Contract and that breach of any of the foregoing will be sufficient grounds for disqualification under 279C.440(2)(d).

The City shall not be liable, either directly or indirectly, in any dispute arising out of the substance or procedure of Bidder/Contractor's drug testing program. Nothing in this drug testing provision shall be construed as requiring Bidder/Contractor to violate any legal, including constitutional rights of any employee, including but not limited to, selection of which employees to test and the manner of such testing. The City shall not be liable for Bidder/Contractor's negligence in establishing or implementing, or failure to establish or implement, a drug testing policy, or for any damage or injury caused by Bidder/Contractor's employees acting under the influence of drugs while performing work covered by the Contract. These are Bidder/Contractor's sole responsibilities.

In Witness whereof, the Bidder has caused this document to be executed by its duly authorized representative on the date shown below.

Signature:_____

Printed Name, Title:_____

Date:_____

PAY EQUITY COMPLIANCE TRAINING
CERTIFICATION FORM
(NEW)

BIDDER'S NAME:_____

PROJECT NAME & NUMBER:_____

ORS 279A.167(1) provides that the Oregon Department of Administrative Services shall establish a program to certify that a person that intends to submit a bid or proposal for a public contract understands the prohibition set forth in ORS 652.220 and in other laws or rules that prohibit discrimination in compensation or wage payments. Following completion of the course, a certificate of completion will be provided. This certification is recommended for ANY contractor in the state of Oregon, and **required for any contractor who employs fifty (50) or more people, and for a contract valued at more than $500,000**. Information on how to receive this certification can be found by clicking here.

To induce the City to award the Contract to the Bidder when the certification is required, the undersigned, as the duly authorized representative of the Bidder, hereby represents and warrants, on behalf of the above named Bidder:

1. That Bidder has completed the training on pay equity as outlined in ORS 652.220; and

2. A copy of the Certificate of Completion of the pay equity compliance training will be available for inspection by the City at any time upon the City's request.

In Witness whereof, the Bidder has caused this document to be executed by its duly authorized representative on the date shown below.

Signature:_____

Printed Name, Title:_____

Date:_____

CITY OF ROSEBURG
PUBLIC WORKS BOND - PRE-BID NOTICE AND CERTIFICATION

I, the undersigned contractor, hereby certify that if awarded the contract for which I am submitting this bid, prior to beginning work on such Project, unless exempt under ORS 279C.800 to 279C.870, I will file with the Construction Contractors Board, a Public Works Bond in the amount of $30,000 with a corporate surety authorized to do business in the State of Oregon. I further certify that before permitting a subcontractor to start work on the Project upon which I am submitting this bid, I will verify that the subcontractor has also filed such Public Works Bond or has elected not to file such bond as allowed by state law. The Public Works Bond shall provide that the contractor or subcontractor will pay claims ordered by the Bureau of Labor and Industries to workers performing labor upon public works projects. The bond shall be a continuing obligation and remain continuously in effect.

If, as a contractor, I qualify as a disadvantaged, minority, women, disable veteran or emerging small business enterprise certified under ORS 200.055 and I have elected not to file the aforementioned Public Works Bond, I hereby certify that I will file written verification of such certification with the Construction Contractors Board. I also certify that before beginning any work on the Project, I will provide the City of Roseburg and the Construction Contractors Board written notice that I have elected not to file the Public Works Bond. If so certified under ORS 200.055, I understand that my election not to file the Public Works Bond will expire one year from the date it was filed and that a claim for unpaid wages may be filed against the payment bond I submitted on the Project.

I further certify that I understand the Public Works Bond described above is in addition to any other bond that I am required to provide, or that may be required of a subcontractor, for this Project.

Project Name:_____

Project Number:_____

Contractor's Printed Name:_____

Contractor's Signature:_____

Dated:_____

CITY OF ROSEBURG
CONSTRUCTION CONTRACT
[PROJECT #]

Dated: _____

Parties: City of Roseburg ("CITY")
A municipal corporation in the State of Oregon
900 SE Douglas Avenue
Roseburg, OR 97470

and

[Name of Company] ("CONTRACTOR")

Additional Independent Contractor Information:

A. Type of Entity: ☐ Sole Proprietorship ☐ Partnership ☐ Limited Liability Company ☐ Corporation
B. Address:
C. Telephone:
D. Fax No:
E. Email:
F. Construction Contractor Board No.

This Contract is made and entered into this _____ day of _____, 2020, by and between _____hereinafter called the "Contractor", and the City of Roseburg, a municipal corporation of the State of Oregon, hereinafter called the "City".

WITNESSETH

That the Contractor and City, for the consideration hereinafter described agree as follows:

1. <u>WORK TO BE PERFORMED</u>. The Contractor agrees to do all the work and furnish all necessary labor, materials, tools and equipment for the completion of the **STEWART PARK PAVILION RENOVATION, Project No. 19GR20** in accordance with the bid made by the Contractor on the ____ day of _____, 2020, all in full compliance with the Contract Documents referred to herein, and guarantees all materials and workmanship for one year after acceptance of the project.

2. <u>CONTRACT DOCUMENTS</u>. The Contract Documents include the City's Invitation to Bid, Information to Bidders, the Bid Form signed by the Contractor, this Construction Contract with Exhibit A, First-Tier Subcontractor Disclosure Form, Drug Testing Program Certification Form, Bidder's Responsibility Form, Performance Bond, Payment Bond, Public Works Bond Filing Certification form (when required), General Conditions, Technical Provisions, Special Conditions, Standard Drawings, Specifications and Plans and Supplemental Specifications, all

as required for the full execution and satisfactory completion of the work. All of the Contract Documents are incorporated herein by this reference and made a part of this Contract.

3. PAYMENT. In consideration of the faithful performance of the work herein described, the City agrees to pay the Contractor **(insert cost/bid amount)** as payment in full per the provisions of the Contract Documents.

4. TIME OF PERFORMANCE - LIQUIDATED DAMAGES. The Contractor shall commence work under this Contract upon receiving notification to proceed from the City. The Contractor agrees that the work under this Contract shall be completed within **forty five (45)** calendar days after notification to begin work. If the Contractor fails to complete the Project within the time hereinbefore mentioned, or in the extended time agreed upon, liquidated damages shall be paid to or withheld by the City at the rate of **five hundred ($500.00)** per day until the Project is completed. It has been agreed that the damages arising from a delay in completion would be difficult to ascertain with any degree of accuracy, even after the Project is completed. It has also been agreed that the amount of liquidated damages specified herein is a reasonable forecast of just compensation for the harm that will be caused by a delay in completion of the Project. Any such sum which the Contractor may be obligated to pay under the terms of this Paragraph is paid as liquidated damages, and not as a penalty.

5. COMPLIANCE WITH LAW. The Contractor shall comply with all local, state and federal laws, ordinances and regulations applicable to contracts covering municipal contracts, and shall make prompt payment of all amounts that may be due from said Contractor in the way of taxes, other governmental charges or lawful deductions, and shall make prompt payment of all labor and materials and shall save the City harmless from any damages or claims whatsoever in the performance of the Contract. Contractor and all subcontractors agree to comply with the City's Standard Contract Provisions, attached as Exhibit A and incorporated herein by this reference, and Roseburg Municipal Code Regulations relating to business registration.

6. NOTICE. Any notice required or permitted by this Contract must be delivered and served personally, or alternatively, deposited in the United States mail, postage prepaid, registered or certified, return receipt requested, addressed to the parties as shown below:

CITY:	**CONTRACTOR:**
City of Roseburg	_____
ATTN: City Manager	_____
900 SE Douglas Avenue	_____
Roseburg OR 97470	_____

Such notice, if mailed within the State of Oregon, shall be deemed delivered upon the second day following the date postmarked. If mailed outside the State of Oregon, notice shall be deemed delivered upon the fifth day following the date postmarked.

7. GOVERNING LAW; VENUE LOCATION. Oregon law shall be applied to all actions relating to the Contract, and the venue in any such action shall lie in the Circuit Court of Douglas County, Oregon.

IN WITNESS WHEREOF, the parties hereto have executed this Contract the day and year first above written.

CITY

_____
Nicole Messenger
City Manager

Date:_____

ATTEST:

_____
Amy L. Sowa, City Recorder

CONTRACTOR

_____
(Authorized Signature)
Title:_____

Date:_____

_____
Tax Identification Number

Email:_____

EXHIBIT "A"
STANDARD CONTRACT PROVISIONS
PREVAILING WAGE CONTRACT
(ORS 279C.800 - 279C.870)

The following provisions, if applicable, are hereby included in and made a part of the attached public contract which is subject to Prevailing Wage Laws and rates, between the City of Roseburg and the Contractor named therein as provided for in the Roseburg Code, Oregon Revised Statutes, and Federal laws, rules, regulations, and guidelines. If a Contractor or Subcontractor violates the provisions below, the City may, at its option, terminate the contract or a subcontract and said Contractor or Subcontractor in such event shall forfeit all rights under the contract except to payment for actual labor and materials furnished to the City. The City may waive in whole or in part any forfeitures or sanctions provided in this Exhibit.

1. PREFERENCE FOR OREGON GOODS AND SERVICES; NONRESIDENT CONTRACTOR REPORT TO DEPARTMENT OF REVENUE - ORS 279A.120:

1.1 For purposes of awarding the contract the City will:

1.1.1 give preference to goods and services that have been manufactured or produced in Oregon if the price, fitness, availability and quality are otherwise equal; and

1.1.2 add a percentage increase to the bid of a non-resident bidder equal to the percentage, if any, of the preference given to the contractor in the same state in which the contractor lives.

1.2 As used in this Section:

1.2.1 "nonresident contractor" means a contractor that is not a resident contractor;

1.2.2 "resident contractor" means a contractor that has paid unemployment taxes or income taxes in the state of Oregon during the twelve (12) calendar months immediately preceding submission of the bid for the contract; has a business address in this state; and stated in the bid for the contract that it was not a "resident bidder" under ORS 279A.120.

1.3 If the Contractor is a nonresident contractor and the contract price exceeds $10,000, the Contractor shall promptly report to the Department of Revenue on forms to be provided by the Department, the total contract price, terms of payment, length of contract and such other information as the Department may require before the Contractor may receive final payment on the public contract. The City shall satisfy itself that the requirement of this Subsection has been complied with before it issues a final payment on the contract.

2. PAYMENT OF LABORERS AND MATERIALMEN, CONTRIBUTIONS TO INDUSTRIAL ACCIDENT FUND, LIENS, AND WITHHOLDING TAXES - ORS 279C.505(1):
The Contractor shall:

2.1 Make payment promptly, as due, to all persons supplying to such Contractor, labor or material for the performance of the work provided for in the contract.

2.2 Pay all contributions or amounts due the Industrial Accident Fund from such Contractor or Subcontractor incurred in the performance of the contract.

2.3 Not permit any lien or claim to be filed or prosecuted against the City of Roseburg or any subdivision or agency or employee thereof on account of any labor or material furnished.

2.4 Pay to the Department of Revenue all sums withheld from employees pursuant to ORS 316.167.

3. <u>PAYMENT OF CLAIMS BY PUBLIC OFFICERS - ORS 279C.515</u>:

3.1 If the Contractor fails, neglects or refuses to make prompt payment of any claim for labor or services furnished to the Contractor or a Subcontractor by any person in connection with the contract as such claim becomes due, the public officer or officers representing the City of Roseburg may pay such claims to the person furnishing the labor or services and charge the amount of the payment against funds due or to become due the Contractor by reason of the contract. The payment of a claim in the manner authorized shall not relieve the Contractor or his/her surety from his or her obligations with respect to any unpaid claims.

3.2 If the Contractor or a first-tier Subcontractor fails, neglects or refuses to make payment to a person furnishing labor or materials in connection with the contract within thirty (30) days after receipt of payment from the City of Roseburg or the Contractor, the Contractor or first-tier Subcontractor shall owe the person the amount due plus interest charges commencing at the end of the 10-day period that payment is due under ORS 279C.580(4) and ending upon final payment, unless payment is subject to a good faith dispute as defined in ORS 279C.580. The rate of interest charged to the Contractor or first-tier Subcontractor on the amount due shall equal three times the discount rate on 90-day commercial paper in effect at the Federal Reserve Bank in the Federal Reserve District that includes Oregon on the date that is thirty (30) calendar days after the date when payment was received from the City of Roseburg or from the Contractor, but the rate of interest shall not exceed 30 percent. The amount of interest may not be waived.

3.3 If the Contractor or Subcontractor fails, neglects or refuses to make payment to a person furnishing labor or materials in connection with the contract, the person may file a complaint with the Construction Contractors Board, unless payment is subject to a good faith dispute as defined in ORS 279C.580. The Contractor shall announce the foregoing in any Subcontract issued.

4. <u>HOURS OF LABOR - ORS 279C.520</u>: No person shall be employed for more than 10 hours in any one day, or 40 hours in any one week, except in cases of necessity, emergency, or when the public policy absolutely requires it, and in such cases the employee shall be paid at time and a half pay:

4.1 For all overtime worked in excess of 8 hours a day or 40 hours in any one week, when the work week is five consecutive days, Monday through Friday; or

4.2 For all overtime in excess of 10 hours a day or 40 hours in any one week when the work week is four consecutive days, Monday through Friday; and

4.3 For all work performed on Saturday and on any legal holiday specified in ORS 279C.540, or all holidays specified in a collective bargaining agreement.

The Contractor must give notice to employees who perform work on the contract, in writing, either at the time of hire or before commencement of work on the contract, or by posting a notice in a location frequented by employees, the number of hours per day and days per week that the employees may be required to work.

5. PAYMENT FOR MEDICAL CARE AND ATTENTION TO EMPLOYEES - ORS 279C.530:

5.1 The Contractor shall promptly as due, make payment to any person, co-partnership or association or corporation furnishing medical, surgical, and hospital care or other needed care and attention, incident to sickness or injury, to the employees of such Contractor, of all sums which the Contractor agrees to pay for such services and all monies and sums which the Contractor collected or deducted from the wages of employees pursuant to any law, contract or agreement for the purpose of providing or paying for such service.

5.2 The Contractor, its subcontractors, if any, and all employers providing work, labor or materials under this Contract who are subject employers under the Oregon Workers' Compensation Law shall comply with ORS 656.017, which requires them to provide workers' compensation coverage that satisfies Oregon law for all their subject workers. Out-of-state employers must provide workers' compensation coverage that complies with ORS 656.126 for their workers. Employer's Liability Insurance with coverage of not less than $500,000 each accident shall be included.

6. PAYMENT TO SUBCONTRACTORS - ORS 279C.580:

6.1 The Contractor shall include in each subcontract for property or services entered into by the Contractor and a first-tier Subcontractor, including a material supplier, for the purpose of performing the public contract:

6.1.1 A payment clause that obligates the Contractor to pay the first-tier Subcontractor for satisfactory performance under its subcontract within ten (10) calendar days of payment by the City out of such amounts as are paid to the Contractor by the City of Roseburg under the contract; and

6.1.2 An interest penalty clause that obligates the Contractor, if payment is not made within thirty (30) calendar days after receipt of payment from the City of Roseburg, to pay to the first-tier Subcontractor an interest penalty on amounts due in the case of each payment not made in accordance with the payment clause included in the subcontract pursuant to Paragraph 6.1.1 of this Subsection. A Contractor or first-tier Subcontractor

shall not be obligated to pay an interest penalty if the only reason that the Contractor or first-tier Subcontractor did not make payment when payment was due is that the Contractor or first-tier Subcontractor did not receive payment from the City of Roseburg or Contractor when payment was due. The interest penalty shall be:

6.1.2.1 For the period beginning on the day after the required payment date and ending on the date on which payment of the amount due is made; and

6.1.2.2 Computed at the rate specified in ORS 279C.515(2).

6.2 The Contractor shall include in each of its subcontracts, for the purpose of performance of such contract condition, a provision requiring the first-tier Subcontractor to include a payment clause and an interest penalty clause conforming to the standards set forth in Paragraphs 6.1.1 and 6.1.2 and requiring each of its Subcontractors to include such clauses in their subcontracts with each lower-tier Subcontractor or supplier.

6.3 None of the provisions of this Section 6 are intended to prevent the Contractor or any Subcontractor from including in its contracts the provisions described in ORS 279C.580(5) and (6).

7. PROHIBITION OF DISCRIMINATORY WAGE RATES BASED ON SEX – ORS 652.220: The Contractor shall not:

7.1 Discriminate between employees on the basis of a protected class in the payment of wages or other compensation for work of comparable character, the performance of which requires comparable skills;

7.2 Pay wages or other compensation to any employee at a rate greater than that at which the employer pays wages or other compensation to employees of a protected class for work of comparable character, the performance of which requires comparable skills. This section does not apply where:

(a) Payment is made pursuant to a seniority or merit system which does not discriminate on the basis of a protected class; or
(b) A system measures earnings by quantity or quality of production, including piece-rate work; or
(c) Travel is necessary and regular for the employee; or
(d) Education, training, experience, or any combination of factors account for the entire compensation differential.

7.3 Discriminate in the payment of wages or other compensation against any employee because the employee has filed a complaint in a proceeding, has testified or is about to testify, or because the employer believes that the employee may testify in any investigation, proceedings or criminal action pursuant to ORS 652.210 to 652.235.

8. DRUG TESTING - ORS 279C.505(2):

8.1 The Contractor shall demonstrate that an employee drug testing program is in place at the time of submitting its bid, and that such program will be maintained throughout the

contract period, including any extensions. The failure of Contractor to have, or to maintain such a drug testing program is grounds for rejection of a bid or immediate termination of the contact.

8.2 The City of Roseburg shall not be liable, either directly or indirectly, in any dispute arising out of the substance or procedure of Contractor's drug testing program. Nothing in this drug testing provision shall be construed as requiring Contractor to violate any legal, including constitutional, rights or any employee, including but not limited to, selection of which employees to test and the manner of such testing. The City shall not be liable for Contractor's negligence in establishing or implementing, failure to establish or implement a drug testing policy, or for any damage or injury caused by Contractor's employees acting under the influence of drugs while performing work covered by the contract. These are Contractor's sole responsibilities and nothing in this provision is intended to create any third party beneficiary rights against the City.

9. PREVAILING WAGE PROVISIONS - ORS 279C.800 - 279C.870; 40 U.S.C. 3141 – 3148:

9.1 The hourly rate of wage to be paid by the Contractor and all Subcontractors to workers under the contract shall not be less than the prevailing rate of wage for an hour's work in the same trade or occupation in the locality where the labor is performed as set forth in the specifications for the public contract; provided however, if the public contract is also subject to the Federal Prevailing Wage Rate pursuant to the Davis-Bacon Act (40 U.S.C. 3141 - 3148), then the higher of the two rates shall be paid. The Contractor will comply with the provisions of ORS 279C.840 and all applicable provisions of ORS 279C.800 to 279C.870 and/or the Davis-Bacon Act, 40 U.S.C. 3141 - 3148.

9.2 The Contractor or the Contractor's surety and every Subcontractor or the Subcontractor's surety shall file certified statements with the City in writing using the form prescribed by the Commissioner of the Bureau of Labor and Industries certifying the hourly rate of wage paid each worker whom the Contractor or the Subcontractor has employed in the Work under the contract and further certifying that no worker employed under such public contract has been paid less than the prevailing rate of wage or less than the minimum hourly rate of wage specified in the contract. The certified statement shall be verified by the oath of the Contractor or the Contractor's surety or Subcontractor or the Subcontractor's surety that the Contractor or Subcontractor has read the certified statement and knows the contents thereof and that the same is true to the Contractor's or Subcontractor's knowledge. The certified statements shall set out accurately and completely the payroll records for the prior week including the name and address of each worker, the worker's correct classification, rate of pay, daily and weekly number of hours worked, deductions made, and actual wages paid.

9.3 Each certified statement shall be delivered or mailed by the Contractor or Subcontractor to the City. A true copy of the certified statement shall also be filed at the same time with the Commissioner of the Bureau of Labor and Industries. Certified statements for each week during which the Contractor or Subcontractor employs a worker under the public contract shall be submitted once a month, by the fifth business day of the following month. Information submitted on certified statements may be used only to ensure compliance with the provisions of ORS 279C.800 to 279C 870. The City shall retain

25% of the amount earned by the Contractor if the certified statements are not submitted as required. The City shall pay the Contractor the amount retained within 14 days after the Contractor files the certified statements regardless of whether a Subcontractor has failed to file the required certified statements. The Contractor shall retain 25% of any amount earned by a first-tier Subcontractor until the Subcontractor has filed with the City, the required certified statements. The Contractor shall verify the first-tier Subcontractor has filed the certified statements before the Contractor may pay the Subcontractor any amount retained. The Contractor shall pay the first-tier Subcontractor the amount retained within 14 days after the Subcontractor files the required certified statements.

10. PUBLIC WORKS BOND REQUIREMENTS – ORS 279C.836:

10.1 If the public contract involves public works, unless exempt under ORS 279C.800 to 279C.870, prior to beginning work on the contract, the Contractor shall file with the Construction Contractors Board, a Public Works Bond in the amount of $30,000 with a corporate surety authorized to do business in the State of Oregon.

10.2 Before allowing a Subcontractor to begin work under a public contract involving public works, for which the Contractor has been awarded the contract, the Contractor shall verify that the Subcontractor has also filed a Public Works Bond with the Construction Contractors Board or elected not to file such bond as allowed by state law.

10.3 The Public Works Bond shall provide that the Contractor or Subcontract will pay claims ordered by the Bureau of Labor and Industries to workers performing labor under the public contract involving public works. The bond shall be a continuing obligation and remain continuously in effect.

10.4 If the Contractor or Subcontractor qualifies as a disadvantaged, minority, women, disabled veteran or emerging small business enterprise certified under ORS 200.055 and has elected not to file the Public Works Bond, the Contractor or Subcontractor will file written verification of such certification with the Construction Contractors Board. If the Contractor or Subcontractor elects not to file the Public Works Bond, before beginning any work on the public contract involving public works, the Contractor or Subcontractor shall provide the City and the Construction Contractors Board with written notification of such election.

11. DEMOLITION CONTRACTS; LAND AND LANDSCAPE MAINTENANCE - ORS 279C.510:

11.1 If the public contract includes demolition, the Contractor shall salvage or recycle construction and demolition debris, if feasible and cost effective.

11.2 If the public contract includes services for lawn and landscape maintenance, the Contractor shall compost or mulch yard waste material at an approved site.

12. DISCRIMINATION IN SUBCONTRACTING PROHIBITED; REMEDIES - ORS 279A.110:

12.1 The Contractor may not discriminate against a Subcontractor in the awarding of a subcontract because the Subcontractor is a minority, women, disabled veteran or emerging small business enterprise certified under ORS 200.055.

12.2 By entering into the contract, the Contractor certified it has not discriminated and will not discriminate, in violation of Subsection 12.1, against any minority, women, disabled veteran or emerging small business enterprise in obtaining any required subcontract.

12.3 If the Contractor violates the nondiscrimination certification made under Subsection 12.2, the City may regard the violation as a breach of contract that permits the City to terminate the contract or exercise any remedies for breach permitted under the contract.

13. HIGHEST STANDARDS; CONSEQUENCES FOR FAILURE – ORS 279B.060:

13.1 By entering into the Contract, Contractor agrees to perform the work to the highest standards prevalent in the industry or business most closely related to the work to be provided;

13.2 Contractor understands that failure to meet the highest standards in the industry may result in consequences including, but not limited to:

13.2.1 reducing or withholding of payment;

13.2.2 requiring Contractor to perform, at Contractor's own expense, additional work required to meet such standards; or

13.2.3 declaring a default, terminating the Contract and seeking damages and other relief available under the terms of the Contract or other applicable law.

14. COMPLIANCE WITH LAWS: The Contractor and Subcontractor shall comply with all federal, state and local laws, rules, ordinances and regulations at all times and in the performance of the contract.

CITY OF ROSEBURG
PUBLIC WORKS BOND FILING CERTIFICATION

Pursuant to ORS 279C.800 to 279C.870, I, undersigned contractor, do hereby certify that, prior to beginning work on the Project for which I have been awarded the bid by the City of Roseburg:

1. I have filed with the Construction Contractors Board ("Board"), a Public Works Bond in the amount of $30,000 with a corporate surety authorized to do business in the State of Oregon.
_____**Yes** _____**No (Check one)**

2. I have elected not to file a Public Works Bond with the Board because I am a disadvantaged, minority, women, disabled veteran or emerging small business enterprise certified under ORS 200.055. I have provided the Board written verification of such certification and written notification of my election not to file the Public Works Bond. I understand that my election not to file the Public Works Bond will expire one year from the date it was filed and that a claim for unpaid wages may be filed against the payment bond I submitted on the Project.
_____**Yes** _____**No (Check one)**

3. I have verified any subcontractor involved in the Project has, prior to beginning any work on this Project, either filed the Public Works Bond with the Board or has elected not to file the Public Works Bond because the subcontractor is a disadvantaged, minority, women, disabled veteran or emerging small business enterprise certified under ORS 200.055.
_____**Yes** _____**No (Check one)**

(a) I have verified that any subcontractor involved in this Project that has elected not to file the Public Works Bond has provided the Board written verification of its certification under ORS 200.055 and written notification of its election not to file the Public Works Bond. _____**Yes** _____**No (Check one)**

I understand the Public Works Bond described above is in addition to any other bond that I am required to provide, or that may be required by a subcontractor, for this Project.

Project Name:_____

Project Number:_____

Contractor's Printed Name:_____

Contractor's Signature:_____

Dated:_____

CITY OF ROSEBURG
STANDARD PERFORMANCE BOND

Bond No.: _____
Solicitation: _____
Project Name: _____

_____(Surety #1) Bond Amount No. 1: $_____
_____(Surety #2)* Bond Amount No. 2: $_____
**If using multiple sureties* Total Penal Sum of Bond $_____

We, _____ as Principal, and the above identified Surety(ies), authorized to transact surety business in Oregon, as Surety, hereby jointly and severally bind ourselves, our respective heirs, executors, administrators, successors and assigns, firmly by these presents to pay to the City of Roseburg the sum of (Total Penal Sum of Bond) _____
(Provided that we the Sureties bind ourselves in such sum "jointly and severally" as well as "severally" only for the purpose of allowing a joint action or actions against any or all of us, and for all other purposes each Surety binds itself, jointly and severally with the Principal, for the payment of such sum only as is set forth opposite the name of such Surety), and

WHEREAS, the Principal has entered into a contract with the City of Roseburg, the plans, specifications, terms and conditions of which are contained in the above-referenced Solicitation;

WHEREAS, the terms and conditions of the contract, together with applicable plans, standard specifications, special provisions, schedule of performance, and schedule of contract prices, are made a part of this Performance Bond by reference, whether or not attached to the contract (all hereafter called "Contract"); and

WHEREAS, the Principal has agreed to perform the Contract in accordance with the terms, conditions, requirements, plans and specifications, and all authorized modifications of the Contract which increase the amount of the work, the amount of the Contract, or constitute an authorized extension of the time for performance, notice of any such modifications hereby being waived by the Surety:

NOW, THEREFORE, THE CONDITION OF THIS BOND IS SUCH that if the Principal herein shall faithfully and truly observe and comply with the terms, conditions and provisions of the Contract, in all respects, and shall well and truly and fully do and perform all matters and things undertaken by Contractor to be performed under the Contract, upon the terms set forth therein, and within the time prescribed therein, or as extended as provided in the Contract, with or without notice to the Sureties, and shall indemnify and save harmless the City of Roseburg and members thereof, its officers, employees and agents, against any direct or indirect damages or claim of every kind and description that shall be suffered or claimed to be suffered in connection with or arising out of the performance of the Contract by the Principal or its subcontractors, and shall in all respects perform said Contract according to law, then this obligation is to be void; otherwise, it shall remain in full force and effect.

Nonpayment of the bond premium will not invalidate this bond nor shall the City of Roseburg be obligated for the payment of any premiums.

This bond is given and received under authority of ORS Chapters 279A, 279B and 279C, the provisions of which hereby are incorporated into this bond and made a part hereof.

IN WITNESS WHEREOF, WE HAVE CAUSED THIS INSTRUMENT TO BE EXECUTED AND SEALED BY OUR DULY AUTHORIZED LEGAL REPRESENTATIVES.

Dated this _____ day of _____, 2020.

PRINCIPAL: _____

By

_____
Signature

_____
Official Capacity

Attest:

_____
Corporation Secretary

SURETY: _____
[Add signatures for each surety if using multiple bonds]

BY ATTORNEY-IN-FACT:
[Power-of-Attorney must accompany each surety bond]

_____
Name

_____
Signature

_____
Address

_____
City State Zip

_____
Phone Email

CITY OF ROSEBURG
PAYMENT BOND

Bond No.: _____
Solicitation: _____
Project Name: _____

_____(Surety #1) Bond Amount No. 1: $_____
_____(Surety #2)* Bond Amount No. 2: $_____
**If using multiple sureties* Total Penal Sum of Bond $_____

We, _____ as Principal, and the above identified Surety(ies), authorized to transact surety business in Oregon, as Surety, hereby jointly and severally bind ourselves, our respective heirs, executors, administrators, successors and assigns, firmly by these presents to pay to the City of Roseburg the sum of (Total Penal Sum of Bond) _____
(Provided that we the Sureties bind ourselves in such sum "jointly and severally" as well as "severally" only for the purpose of allowing a joint action or actions against any or all of us, and for all other purposes each Surety binds itself, jointly and severally with the Principal, for the payment of such sum only as is set forth opposite the name of such Surety), and

WHEREAS, the Principal has entered into a contract with the City of Roseburg, the plans, specifications, terms and conditions of which are contained in the above-referenced Solicitation;

WHEREAS, the terms and conditions of the contract, together with applicable plans, standard specifications, special provisions, schedule of performance, and schedule of contract prices, are made a part of this Payment Bond by reference, whether or not attached to the contract (all hereafter called "Contract"); and

WHEREAS, the Principal has agreed to perform the Contract in accordance with the terms, conditions, requirements, plans and specifications, and schedule of Contract prices which are set forth in the Contract and any attachments, and all authorized modifications of the Contract which increase the amount of the work, or the cost of the Contract, or constitute authorized extensions of time for performance of the Contract, notice of any such modifications hereby being waived by the Surety:

NOW, THEREFORE, THE CONDITION OF THIS BOND IS SUCH that if the Principal shall faithfully and truly observe and comply with the terms, conditions and provisions of the Contract, in all respects, and shall well and truly and fully do and perform all matters and things by it undertaken to be performed under said Contract and any duly authorized modifications that are made, upon the terms set forth therein, and within the time prescribed therein, or as extended therein as provided by the Contract, with or without notice to the Sureties, and shall indemnify and save harmless the City of Roseburg and members thereof, its officers, employees and agents, against any direct or indirect damages or claim of every kind and description that shall be suffered or claimed to be suffered in connection with or arising out of the performance of the Contract by the Contractor or its subcontractors, and shall promptly pay all persons supplying labor, materials or both to the Principal or its subcontractors for

prosecution of the work provided in the Contract; and shall promptly pay all contribution due according to workers compensation requirements and the State Unemployment compensation Fund from the Principal or its subcontractors in connection with the performance of the Contract; and shall pay over to the Oregon Department of Revenue all sums required to be deducted and retained from the wages of employees of the Principal and its subcontractors pursuant to ORS 316.167, and shall permit no lien nor claim to be filed or prosecuted against the City on account of any labor or materials furnished; and do all things required of the Principal by the laws of this State, then this obligation shall be void; otherwise, it shall remain in full force and effect.

Nonpayment of the bond premium will not invalidate this bond nor shall the City of Roseburg be obligated for the payment of any premiums.

This bond is given and received under authority of ORS Chapters 279A, 279B and 279C, the provisions of which hereby are incorporated into this bond and made a part hereof.

IN WITNESS WHEREOF, WE HAVE CAUSED THIS INSTRUMENT TO BE EXECUTED AND SEALED BY OUR DULY AUTHORIZED LEGAL REPRESENTATIVES.

Dated this _____ day of _____, 2020.

PRINCIPAL: _____

By _____
Signature

_____
Official Capacity

Attest: _____
Corporation Secretary

SURETY: _____
[Add signatures for each surety if using multiple bonds]

BY ATTORNEY-IN-FACT:
[Power-of-Attorney must accompany each surety bond]

_____
Name

_____
Signature

_____
Address

_____
City State Zip

_____
Phone Email

LOWEST BIDDER RESPONSIBILITY DETERMINATION FORM

(TO BE COMPLETED BY THE CITY UPON NOTICE OF INTENT TO AWARD)

"Lowest responsible bidder" means the lowest bidder who is not on the list established by the Construction Contractors Board pursuant to ORS 701.227 and who has:

1. Substantially complied with all prescribed public contracting procedures and requirements of the State of Oregon and the City of Roseburg;
2. Met the standards of responsibility described in ORS 279B.110 and 279C.375, and Roseburg Municipal Code Chapter 3.06; and
3. Not been disbarred or disqualified from bidding or debarred by the State of Oregon under ORS 279B.130 or 279C.440, or by the City under the provisions of Roseburg Municipal Code Chapter 3.06.

Project Name:_____

Bid/Project Number:_____

Business Entity/ Bidder's Name:_____

CCB License Number:_____

Form submitted by City of Roseburg.
Form submitted by:

Name:_____

Title:_____

Date:_____

The City has (check all of the following):

[ ] Checked the list created by the Construction Contractors Board under ORS 701.227 for bidders who are not qualified to hold a public improvement contract.

[ ] Determined whether the bidder has met the standards of responsibility. In so doing, the City has found that the bidder demonstrated that the bidder:

[ ] Has available the appropriate financial, material, equipment, facility and personnel resources and expertise, or the ability to obtain the resources and expertise, necessary to meet all contractual responsibilities.

[ ] Holds current licenses that businesses or service professionals operating in this state must hold in order to undertake or perform the work specified in the Contract.

[ ] Is covered by liability insurance and other insurance in amounts required in the solicitation documents.

[ ] Qualifies as a carrier-insured employer or a self-insured employer under ORS 656.407, or has elected coverage under ORS 656.128.

[ ] Has disclosed the bidder's first-tier subcontractors in accordance with ORS 279C.370.

[ ] Has a satisfactory record of performance.

[ ] Has a satisfactory record of integrity.

[ ] Is legally qualified to contract with the City.

[ ] Possesses a certificate that the Oregon Department of Administrative Services issued under ORS 279A.167 – Pay Equity Compliance (if applicable)**. (NEW)**

[ ] Has supplied all necessary information in connection with the inquiry concerning responsibility.

[ ] Determined the bidder to be (check one of the following):

[ ] Responsible under ORS 279C.375(3)(a) and (b).

[ ] Not responsible under ORS 279C.375(3)(a) and (b).

If the City has found the bidder not to be responsible, please see attached document explaining the City's determination.

Note: This form is to be submitted by the City of Roseburg to the Construction Contractors Board immediately following issuance of the City's Notice of Intent to Award the subject contract. A copy must immediately be filed with the City Recorder.

BUREAU OF LABOR AND INDUSTRIES
PREVAILING WAGE RATES FOR PUBLIC WORKS CONTRACTS

Prevailing Wage Rates are the minimum wages that must be paid to all workers employed in the construction, reconstruction, major renovation or painting of all public works, unless specifically exempted by state or federal law. Rather than including the entire State and/or Federal Prevailing Wage Rate publications in the bid specifications and contract, public entities may make reference to the specific prevailing wage rate publication where the prevailing wage rates are found *or* provide a link to the specific prevailing wage rate publication where the prevailing wage rates are found.

Oregon Bureau of Labor and Industries Prevailing Wage Rates applicable to the subject project/contract are available on BOLI's website at www.oregon.gov.boli. The prevailing wages to be applied throughout the duration of this project are those in effect for BOLI Prevailing Wage Rate Region 6, (Douglas County Oregon), upon the date the project is first advertised.

Federal Prevailing Wages Rates under the Davis Bacon Act (40 U.S.C. 3141 et seq.) may be found at www.wdol.gov. The prevailing wages to be applied throughout the duration of this project are those in effect for Federal Prevailing Wage Rates under the Davis Bacon Act (40 U.S.C. 3141 et seq.) at the time the initial specifications were first advertised for bid solicitations.

If the project is subject to both ORS 279C.800 to 279C.870 and to the Davis Bacon Act (40 U.S.C. 3414 et seq.), the contractor and every subcontractor shall pay the higher of the applicable state or federal prevailing rate of wage to all workers on the projects.

For specific information or questions regarding the Prevailing Wage Rate Law, you may log on to the above referenced websites or contact the nearest Oregon Bureau of Labor and Industries office listed below.

BOLI Office Locations

Eugene	1400 Executive Parkway, Eugene, OR 97401	541/686-7623
Medford	700 E. Main, Suite 105, Medford, OR 97504	541/776-6270
Portland	800 NE Oregon St., #32, Portland, OR 97232	503/731-4074
Salem	3865 Wolverine St. NE, Bldg. E-1, Salem, OR 97305	503/378-3292

THIS PROJECT IS SUBJECT TO THE OREGON BOLI PREVAILING WAGE RATES EFFECTIVE ON July 1st, 2020

GENERAL CONDITIONS

1. DEFINITIONS

1.1 Whenever used in these General Conditions or in the other Contract Documents, the following terms shall have the meanings indicated which shall be applicable to both the singular and plural thereof:

"Acceptance" means that the work has been completed in accordance with the Contract Documents and approved in writing by the Owner.

"**Act of God or Nature"** means a natural phenomenon of such catastrophic proportions or intensity as would reasonably prevent performance.

"Addendum" means any written document, signed by all parties, pertaining to additions, deletions, revisions or other issues with the Contract Documents issued after the Contract Documents have been issued.

"Bid" means the offer of a bidder to perform the work described by the Contract Documents when made out and submitted on the prescribed Bid Form and properly signed.

"Bidder" means any person, firm, partnership, corporation, limited liability company, or other entity submitting a bid for the work described hereunder.

"Change Order" means a document recommended by the Project Manager which is signed by the Contractor and the City and authorizes an addition, deletion or revision in the work or an adjustment in the Contract price or Contract times, issued on or after the effective date of the Contract.

"City" means the City of Roseburg located in the State of Oregon, and owner of the Project and work related thereto.

"Contract Documents" means and includes the Invitation to Bid, Information for Bidders, Bid Form, Construction Contract with Exhibit "A" Standard Contract Provisions, First-Tier Subcontractor Disclosure Form, Drug Testing Program Certification Form, Bidder's Responsibility Form, Performance Bond, Payment Bond, Public Works Bond Filing Certification form (when required), General Conditions, Technical Provisions, Special Conditions, Standard Drawings, Specifications & Plans, and Supplemental Specifications all as required for the full execution and satisfactory completion of the Project.

"Contractor" means the firm, partnership, corporation, limited liability company, or other entity executing the Contract with the City for the performance of the work herein described.

“Defective” means, when modifying the work, refers to work that is unsatisfactory, faulty or deficient in that it:

a. does not conform to the Contract Documents; or

b. does not meet the requirements of any applicable inspection, reference standard, test or approval referred to in the Contract Documents; or

c. has been damaged prior to the Project Manager’s recommendation of final payment (unless responsibility for the protection thereof has been assumed by the City at Substantial Completion in accordance with the Contract Documents).

“Design Consultant” means the firm who prepared the Plans and Specifications and shall not mean the Project Manager.

"Engineer" means the City's authorized Engineer, as designated by the City Manager or Public Works Director for the Contract, either acting directly or through the inspector, within the scope of assigned duties.

“Final Completion” means that all work has been completed in conformance with the Contract Documents and the Contract has been fully performed.

“Holidays” means any Oregon legal holiday.

“Liquidated Damages” means that which is set forth in Subsection 6.9 herein.

“Milestone” means a principal event specified in the Contract Documents relating to an intermediate completion date or time prior to Substantial Completion of all of the work.

“Pay Equity Compliance Certificate” means a certificate issued by the Department of Administrative Services pursuant to ORS 279A.167 following completion of pay equity training.

"Payment Bond” means the approved form of security furnished by the Contractor and Contractor's Surety as a guarantee of good faith on the part of the Contractor to make all payments that are the Contractor's obligations, in accordance with the terms of the Contract.

“Performance Bond" means the approved form of security furnished by the Contractor and Contractor's Surety as a guarantee of good faith on the part of the Contractor to execute the work that is the Contractor's obligation, in accordance with the terms of the Contract.

"Plans" means and includes the City approved maps, standard drawings, work order drawings and supplemental drawings and sketches which will show the locations, character, dimensions and details of the work to be done.

"Project" means all work described and specified herein and as indicated on the Plans.

“Project Manager” means the City’s authorized Project Manager for the Contract, as designated by the City Manager or Public Works Director, either acting directly or through a designated representative, within the scope of assigned tasks.

“Proposal Request” means a written statement issued by the Project Manager to the Contractor on or after the effective date of the Contract and signed by the City and the Contractor identifying additions, deletions or revisions in the work, or responding to differing or unforeseen subsurface or physical conditions under which the work is to be performed or to emergencies. A Proposal Request will not change the Contract price or the Contract times but is evidence that the parties expect that the change ordered or documented by a Proposal Request will be incorporated in a subsequently issued Change Order.

“Public Works Bond” means a $30,000 form of security furnished by the Contractor and/or Subcontractor and Contractor’s and/or Subcontractor’s Surety to the Construction Contractors Board to pay claims ordered by the Bureau of Labor and Industries to workers performing labor under a public works project.

“Punch List” means a list developed by the Project Manager after Substantial Completion that identifies defects or deficient workmanship or work not completed in conformance with the Contract Documents.

“Request for Information” means a formal request from the Contractor to the Project Manager requesting clarification and/or direction necessary to complete the work.

"Specifications" means and includes the directions, provisions and requirements contained herein and referred to herein pertaining to the Project.

“Submittals” means all drawings, diagrams, material data, schedules and other information which are specifically prepared or assembled by or for the Contractor and submitted by the Contractor to illustrate some portion of the work.

“Substantial Completion” means that the degree of completion of the Project, or portion of the Project as evidenced by the Project Manager’s written notice of Substantial Completion, sufficient to provide the City, the full-time use of the Project, or portion of the Project, for the purpose for which it was intended. Determination of Substantial Completion is solely at the discretion of the Project Manager. Substantial Completion does not mean complete in accordance with the Contract nor shall Substantial Completion of all or any part of the Project entitle the Contractor to final acceptance under the Contract. The criteria the Project Manager may use in exercising his/her discretion in determining Substantial Completion includes, but is not limited to, the completion of all equipment contained in the Project, or portion of the Project, all other components necessary to enable the City to operate the facility in the manner that was intended.

"Superintendent" means the executive representative of Contractor, authorized to receive and fulfill instructions from the Project Manager or Project Manager’s representatives.

"Supplemental Specifications" means specific instructions setting forth conditions or requirements peculiar to the Project under consideration when said Project is not completely covered by the Specifications contained herein.

"Surety" means the person, firm, partnership, corporation, limited liability company or other entity that has the requisite authority to execute the bonds required from the Contractor.

2. CONTRACT DOCUMENTS

2.1 Award, Execution of Documents, Delivery of Bonds.

2.1.1 If awarded, the Contract will be awarded to the lowest responsible bidder whose qualifications indicate the award will be in the best interest of the City and whose bid complies with all the prescribed requirements. No award will be made until the City has concluded such investigations as the City deems necessary to establish the responsibility, qualifications and financial ability of the Bidders to do the work in accordance with the Contract Documents.

2.1.2 In determining the lowest responsible bidder for the purpose of awarding the Contract, the City, pursuant to ORS 279A.120 shall:

2.1.2.1 give preference to goods and services that have been manufactured or produced in Oregon if the price, fitness, availability and quality are otherwise equal; and

2.1.2.2 add a percentage increase on the bid of a nonresident bidder equal to the percent, if any, of the preference given to that bidder in the state in which the bidder resides.

2.1.3 The City reserves the right to reject any and all bids not in compliance with all public bidding procedures and requirements or when such rejection is in the interest of the City; to reject the bid of a bidder who has previously failed to perform properly or complete contracts of a similar nature on time; and to reject the bid of a bidder who is not, in the opinion of the City, in a position to perform the Contract. If the Contract is awarded, the City will give the successful bidder written notice of award within forty-five (45) calendar days after bid opening.

2.1.4 At least three (3) counterparts of the Construction Contract and such other Contract Documents as practicable will be signed by the City and Contractor. The Contractor shall receive one (1) executed counterpart of the Contract Documents.

2.1.5 When required by the specifications, the Contractor shall deliver simultaneously with the execution of the Contract Documents a good and sufficient Payment Bond to ensure payment of the obligations incurred in the performance of this Contract, a Performance Bond to assure performance of the Contract and the Public Works Bond Filing Certification form executed by the Contractor. No exceptions will be made to this provision.

2.1.6 Failure of the successful bidder to execute the Contract Documents and deliver the required Payment Bond, Performance Bond and Public Works Bond Filing Certification form within ten (10) calendar days of the notification of the award of the Contract shall be just cause for the City to annul the award.

2.2 Correlation, Interpretation, and Intent of Contract Documents.

2.2.1 The intent of the Plans and Specifications as contained herein is to describe the complete Project which the Contractor shall undertake to do in full compliance with the Construction Contract with Exhibit "A", Plans and Specifications. The Contract Documents comprise the entire agreement between the City and the Contractor. The Contract Documents may only be altered as provided in the General Conditions of the Contract.

2.2.2 The Plans and Specifications are intended to be explanatory and complimentary of each other. Contractor shall execute any work indicated in the Plans and not in the Specifications, or vice versa, as if indicated in both. Should any work or materials be reasonably required or intended for carrying the Project to satisfactory completion, which is inadvertently omitted on the Plans and Specifications, Contractor shall furnish the same as fully as if particularly delineated or described. Should it appear that the work to be done or any of the matters relative thereto are not sufficiently detailed or explained in the Contract Documents, the Contractor shall apply to the Project Manager for further explanations as may be necessary and shall conform thereto so far as may be consistent with the terms of the Contract. In the event any doubt or question arising respecting the true meaning of the Plans or Specifications, Contractor may seek a determination by the Project Manager according to Subsection 3.2 and Paragraph 3.3.3. Should the Contractor disagree with the Project Manager's decision, the Contractor may appeal to the City Manager in accordance with Paragraph 3.4.2. In resolving such conflicts, errors and/or discrepancies, the Contract Documents shall be given precedence in the following order: Construction Contract with Exhibit "A", the Plans and the Specifications. Within the Specifications, the order of precedence shall be as follows: General Conditions, Information for Bidders, Special Conditions and Technical Provisions.

2.2.3 Figure dimensions on Plans shall govern over scale dimensions, and detailed drawings shall govern over general drawings. Any work that may reasonably be inferred from the Plans and/or Specifications as being required to produce the intended result shall be supplied whether or not it is specifically called for. Work, materials or equipment described in words which so applied have a well-known technical or trade meaning shall be deemed to reference such recognized standards. The Contractor assumes full responsibility for having familiarized himself with the nature and extent of the Contract Documents, work locality and local conditions that may in any manner affect the work to be done.

2.3 Verification and Warranty. The Contractor shall make the determination of the nature of the work proposed under the Contract, local conditions which can be encountered

within the Project area and all other matters which can in any way affect the work proposed under the Contract. It shall also be the responsibility of the Contractor to be thoroughly familiar with the Contract Documents. Failure to make the examination necessary for this determination or to examine any form, instrument or document of the Contract with Exhibit "A" shall not release the Contractor from the obligations of the Contract with Exhibit "A". The Contractor warrants that no oral or written agreement or conversation with any officer, agent or employee of the City, either before or after the execution of the Contract, has affected or modified any of the terms or obligations herein contained.

2.4 Documents to be Kept on the Jobsite. The Contractor shall keep at least one (1) copy of the Contract Documents at the jobsite, in good order, available to the Project Manager.

2.5 Additional Contract Documents. The City will furnish to the Contractor, on request and free of charge, up to three (3) copies of the Contract Documents. Additional copies of Contract Documents may be obtained upon request by paying the actual cost of reproduction.

2.6 Surveys. When required for the Project, surveying and staking of the component parts of the work shall be as detailed in the Specifications and on the Plans. The Contractor shall construct the work in accordance with the construction stakes and shall be charged with full responsibility for conformity and agreement of the work with said construction stakes.

3. PROJECT MANAGER-CITY-CONTRACTOR RELATIONS

3.1 General. The City has the authority to act as the sole judge of the work with respect to both quantity and quality as set forth in the Contract. It is expressly stipulated that the Plans, Specifications and other Contract Documents set forth the requirements as to the nature of the completed work and do not purport to control the method of performing work except in those instances where the nature of the completed work is dependent on the method of performance.

3.2 Project Manager. The Project Manager is the representative of the City and is employed to act as advisor and consultant to the City in project managing matters related to the Contract. The City has delegated its authority to the Project Manager to make initial decisions regarding all claims and questions, which may arise as to the quality or acceptability of materials furnished and work performed and as to the manner of performance and rate of progress of the work under the Contract. The Project Manager determines the intent and meaning of the Contract and makes initial decisions with respect to the Contractor's fulfillment of the Contract and the Contractor's entitlement to compensation. Should the Contractor disagree with a decision of the Project Manager with respect to the Contract, the Contractor may request that the City Manager review the Project Manager's decision and make a determination in the manner provided under Paragraph 3.4.2.

The Project Manager may designate a field representative as an alternate in his/her capacity on the job site. All notifications required under the Contract shall be made directly to the Project Manager or the designated representative.

3.3 Duties and Responsibilities of the Project Manager

3.3.1 The Project Manager will make periodic visits to the site of the Project to observe the progress and quality of the work and to determine, in general, if the work is proceeding in accordance with the intent of the Contract Documents. The Project Manager shall not be required to make comprehensive or continuous inspections to check the quality or quantity of the work, and shall not be responsible for construction means, methods, techniques, sequences or procedures, or for safety precautions and programs in connection with the Project. Visits and observations made by the Project Manager shall not relieve the Contractor of obligations to conduct comprehensive inspections of the work, to perform acceptable work and to provide adequate safety precautions.

3.3.2 The Project Manager or the field representative thereof will be assigned to periodically observe the work and to act in matters of construction under the Contract. It is understood the Project Manager or field representative shall have the power to issue instructions and make decisions within the limitations of the authority granted by the City. Such inspection shall not relieve the Contractor of obligations to conduct comprehensive inspections of the work, perform acceptable work and provide adequate safety precautions.

3.3.3 All claims of the Contractor shall be presented to the Project Manager or designated representative, for a decision which shall be made in writing within a reasonable time. All decisions of the Project Manager shall be final subject only to the Contractor's right to appeal the Project Manager's decision to the City Manager in the manner provided in Subsection 3.4.

3.4 Appeal to the City Manager by the Contractor.

3.4.1 Determination by the Project Manager. As provided in Subsections 3.1, 3.2, and 3.3, the Contractor shall refer questions regarding meaning and intent of the Contract Documents in writing to the Project Manager for his/her decision. The Project Manager shall, within a reasonable time, respond to the Contractor in writing with his/her decision. If the Contractor disagrees with the Project Manager's decision or considers the decision requires extra work, Contractor may appeal the decision to the City Manager. Any related work performed by the Contractor prior to the Project Manager's decision is done at Contractor's risk unless otherwise authorized by the Project Manager.

3.4.2 City Manager Appeal Process. In the event the Contractor disagrees with any decision of the Project Manager, the Contractor may, within ten (10) calendar days of the date of such decision, appeal the decision to the City Manager for review. The appeal must be in writing and must set forth the questions referred to the Project Manager, the Project Manager's decision and the Contractor's basis for disagreement. The Contractor shall deliver a copy of

the appeal to the Project Manager at the time it is filed with the City Manager. The City Manager shall make all reasonable efforts to review the appeal and deliver his/her decision in writing to the Contractor within thirty (30) calendar days from the date of receipt of the appeal. Failure of the Contractor to appeal the decision of the Project Manager within the said ten (10) calendar day period constitutes a knowing and voluntary waiver of the Contractor's right to thereafter assert any claim resulting from such decision. This procedure is not meant to preclude or discourage informal resolution of disagreements between the Project Manager and the Contractor.

In the event the City Manager elects to do so, the City Manager may establish a "Claims Review Board" either to assist in reviewing an appeal hereunder or to consider Contractor appeals directly. Once established, the Claims Review Board will hear all future appeals of claims for this Contract.

During the pendency of any appeal, any related work performed by the Contractor shall be done at the Contractor's risk unless otherwise authorized by the Project Manager.

The filing of an appeal does not automatically extend the milestones and/or deadlines set forth in the Contract Documents and the Contractor continues to be subject to liquidated damages for failure to complete the Project within the time allotted.

In the event the City Manager or the Contractor commences arbitration or other legal action against the other for damages or for equitable relief, the prevailing party in such arbitration or other legal action is entitled to recover its reasonable attorney's fees therein and in any appeal therefrom.

The parties hereby stipulate and consent that venue for all arbitration or other legal actions arising under the Contract is in Douglas County, Oregon and that jurisdiction for all legal actions that are brought in or transferred to court is in the Douglas County Circuit Court of the State of Oregon; except, if a claim must be brought in a federal forum, then it must be brought and adjudicated solely and exclusively in the United States District Court for the District of Oregon located in Eugene, Oregon.

3.5 Suspension of Work. The Project Manager shall, in addition to its other authority, have the authority to suspend the work, wholly or in part, for such period or periods as may be deemed necessary due to unsuitable weather or such other conditions as are considered unfavorable for prosecution of the work, or failure on the part of the Contractor to carry out the provisions of the Contract. The Contractor shall not suspend operation without the permission of the Project Manager or Project Manager's authorized representative.

3.6 Notice of Potential Claim for Additional Compensation and/or Time.

3.6.1 The Contractor shall not be entitled to any additional compensation or extension of time for any act or failure to act by the Project Manager or the City,

the happening of any event or occurrence or any other cause, unless the Contractor shall have given the Project Manager a written notice of potential claim.

3.6.2 The written notice of potential claim shall set forth the reasons for which the Contractor believes additional compensation or time will or may be due, the nature of the costs involved and insofar as possible, the amount of the potential claim. If based on an act or failure to act by the Project Manager or the City, except in case of emergency, such notice shall be given to the Project Manager prior to the time that the Contractor starts performance of the work giving rise to the potential claim for additional compensation. In all other cases, notice shall be given within ten (10) calendar days after the happening of the event or occurrence giving rise to the potential claim.

3.6.3 It is the intention of this section that differences between the parties arising under and by virtue of the Contract shall be brought to the attention of the Project Manager at the earliest possible time in order that such matters may be settled if possible or other appropriate action may be taken promptly.

3.7 Examination of Completed Work. If the Project Manager requests it, the Contractor at any time before acceptance of the Project by the City, shall remove or uncover such portions of the finished work as may be directed. After examination, the Contractor shall restore said portions of the work to the standards required by the Contract Documents. Should the work thus exposed or examined prove to be in accordance with the Contract Documents, the uncovering or removing, the replacing of the covering or making good of the parts removed, shall be paid for by the City; but should the work so exposed or examined prove to be not in accordance with the Contract Documents, the uncovering or removing and the replacing of the covering or the making good of the parts removed, shall be at Contractor's expense. Should any work be performed without giving notice of plan of work, thereby eliminating an opportunity of inspection by the Project Manager, the Project Manager may require the Contractor to uncover such work at Contractor's own expense for examination by the Project Manager. Cost of uncovering such work shall be borne by the Contractor, whether or not the work is found acceptable. The work shall also be subject to inspection by appropriate governmental inspectors at all times.

3.8 Contractor's Superintendent. A qualified superintendent, who is acceptable to the Project Manager, shall be maintained by the Contractor on the Project to give efficient supervision over the Project until its completion. The superintendent shall have full authority to act on behalf of the Contractor, and all directions given to the superintendent shall be considered given to the Contractor. In general, the Project Manager's instructions shall be confirmed in writing and always upon written request from the Contractor.

3.9 Information Regarding Existing Facilities and Utilities.

3.9.1 Facilities. Any information relative to the location of other structures as might be shown on the Contract Documents will be obtained from the best information available and field observations; however, the City cannot guarantee the accuracy or completeness of this information.

3.9.2 Utilities. The Design Consultant has endeavored to determine the existence of utilities at the job site from the records of positions of these utilities as derived from such records as are shown on the Drawings. No excavations were made to verify the location shown for underground utilities. The service connections to these utilities are not shown on the Drawings. It is the responsibility of the Contractor to determine the exact location of all utilities and service connections hereto. The Contractor shall make its own investigations, including contacting the owners of appropriate utilities and making exploratory excavations to determine the locations and type of existing utilities, including service connections, prior to commencing work that could result in damage to such utilities and/or surrounding structures. The Contractor shall immediately notify the Project Manager as to any utility discovered by the Contractor that is not shown on the Drawings or that is in a different position than shown on the Drawings.

In the event it is necessary to remove, relocate or temporarily maintain a utility because of interference with the work, the Contractor shall perform the work on the utility and the City shall pay Contractor as follows:

3.9.2.1 When it is necessary to remove, relocate or temporarily maintain a service connection, the cost of which is not required to be borne by the owner thereof, the Contractor bears all expenses incidental to the work on the service connection. The Contractor shall perform the work on the service connection in a manner satisfactory to the owner thereof; if being understood that the owner of the service connection has the option of doing such work with its own forces, or permitting the work to be done by the Contractor.

3.9.2.2 When it is necessary to remove, relocate or temporarily maintain a utility or underground obstruction that is in the position shown on the Drawings, the cost of which is not required to be borne by the owner thereof, the Contractor bears all expenses incidental to the work on the utility. The Contractor shall perform the work on the utility in a manner satisfactory to the owner thereof; it being understood that the owner of the utility has the option of doing such work with its own forces, or permitting the work to be done by the Contractor.

3.9.2.3 When it is necessary to remove, relocate or temporarily maintain a utility or underground obstruction that is not shown on the Drawings or is in a position different from that shown on the Drawings and were it in the position shown on the Drawings would not need to be removed, relocated or temporarily maintained, the cost of which is not required to be borne by the owner thereof, the City will make

arrangements with the owner of the utility for such work to be done at no cost to the Contractor.

No representations are made that the obligations to move or temporarily maintain any utility and to pay the cost thereof, is or is not required to be borne by the owner of such utility, and it is the responsibility of the Contractor to investigate to determine whether or not said cost is required to be borne by the owner of the utility.

Governmental agencies and owners of utilities reserve the right to enter at any time upon any street, alley, right-of-way or easement for the purpose of making changes in their property made necessary by the work and for the purpose of maintaining and making repairs to their property.

3.10 Use of Premises

3.10.1 All work included under the Contract is to be constructed on land belonging to the City, on public right-of-way administered and regulated by state and/or local government or on easements to the benefit of the City or the public. The Contractor shall abide by special conditions or requirements of the property owner or governing authority. The Contractor shall confine equipment, the storage of materials and the operation of Contractor's workers to the limits as shown on the Plans or as indicated by law, ordinances, permits or directions of the Project Manager and shall not unreasonably encumber the premises with materials.

3.10.2 Any additional land and access thereto which the Contractor might desire for temporary construction facilities or for storage of materials shall be provided by the Contractor with no liability to the City. The Contractor shall pay all costs involved in acquiring such rights and all clean up shall be made as required by these Specifications.

3.11 Private Property. The Contractor shall not enter upon private property for any purpose without obtaining permission and shall be responsible for the preservation of all public property, trees, monuments, etc. along and adjacent to the street and/or right-of-way, and shall use every precaution necessary to prevent damage or injury thereto. The Contractor shall use suitable precautions to prevent damage to pipes, conduits and other underground structures, including but not limited to, verifying with all appropriate utilities where underground structures are located, and shall protect carefully from disturbance or damage all monuments and property marks until an authorized agent has witnessed or otherwise referenced their location and shall not remove them until directed.

3.12 Assignment of Contract. Contractor shall not sublet, sell or assign the Contract or sublet any of the work to be performed hereunder without the written consent of the City. Any such assignment or subletting of any such work without City's consent shall be null and void and without force or effect.

3.13 City's Right to do Work. If, in the sole opinion of the Project Manager, the Contractor neglects to prosecute the work properly or neglects or refuses at Contractor's own cost, to take up and replace work that has been rejected by the Project Manager, the Project Manager shall notify the City who shall notify the Surety of the condition. After at least ten (10) calendar days written notice to the Contractor and the Contractor's Surety, or without notice if an emergency or danger to the Project or public exists, and without prejudice to any other right which the City may have under the Contract, the City may take over that portion of the Project which has been improperly executed, make good the deficiencies and deduct the actual costs thereof from the payments then or thereafter due the Contractor. If no amount is owed to the Contractor, then the City may still pursue all of its other legal and/or equitable remedies.

3.14 City's Right to Terminate Contract.

3.14.1 Upon occurrence of any one or more of the following, the City may terminate the Contract at any time, immediately or upon such notice as the City in its sole discretion deems appropriate, by providing written notice to the Contractor which describes the reason for termination:

3.14.1.1 Contractor persistently fails to perform the work in accordance with the Contract Documents, including but not limited to, failure to supply sufficient skilled workers, suitable materials or equipment and failure to adhere to the progress schedule as the schedule may be revised from time to time;

3.14.1.2 Contractor fails to comply with applicable laws or the provisions of any of the Contract Documents, including, but not limited to the Construction Contract with Exhibit “A” Standard City Contract Provisions;

3.14.1.3 Contractor disregards the authority of the Project Manager;

3.14.1.4 Contractor violates any provision of the Contract and, after receiving notice of the violation, fails to remedy the breach immediately; or

3.14.1.5 Contractor files for bankruptcy under any chapter of the Bankruptcy Code (Title 11, United States Code); or a petition in bankruptcy is filed against Contractor under the Bankruptcy Code or any other provision of law seeking substantial relief; or Contractor makes a general assignment for the benefit of creditors; or a trustee, receiver or similar agent is appointed to take charge of Contractor's property for the benefit of creditors; or Contractor otherwise admits in writing to being unable to pay its debts as they become due.

3.14.2 Upon the City’s issuance of written notice of termination, the Contractor shall immediately cease all work under this Contract, unless, as shall be specified

in the notice, the City, in its sole discretion, would be harmed by any uncompleted work, in which case, Contractor shall complete those items specified by the City in its notice.

3.14.3 The City may terminate the Contract upon seven (7) calendar days' notice if the City determines for any reason that the completion of the Contract is no longer in the best interests of the City.

3.14.4 If the City terminates the Contract pursuant to Paragraph 3.14.1, the City may choose any remedy available to it under the Contract, applicable statutes, City Code or common law, including but not limited to, completing the Project itself or through another contractor. The Contractor shall pay the City for all additional costs incurred by the City to obtain substitute performance. The Contractor shall be entitled to payment for that portion of the work that the Contractor completed according to the Contract, less the City's costs to obtain substitute performance for the balance of the work.

3.14.5 If the City terminates the Contract pursuant to Section 3.14.3, the City shall pay Contractor for that portion of the work the Contractor has completed according to the Contract, plus Contractor's cost for materials ordered and delivered to the site before Contractor receives the City's notice of termination; provided that such materials shall then belong to the City.

3.15 Contractor's Right to Stop Work or Terminate Contract. The Contractor may suspend work or terminate the Contract upon ten (10) calendar days written notice to the City, for any of the following reasons:

3.15.1 If an order of any court or other public authority caused the work to be stopped or suspended for a period of ninety (90) calendar days through no act or fault of the Contractor or his employees;

3.15.2 If the City should fail to act upon any request for payment within thirty (30) calendar days after its approval by the Project Manager; or

3.15.3 If the City should fail to pay the Contractor any sum within thirty (30) calendar days after its award by arbitrators.

3.16 Rights of Various Interests. Wherever work being done by the City's forces is contiguous to work covered by the Contract, the respective rights of the various interests involved shall be established by the Project Manager to secure the completion of the various portions of the work in general harmony.

3.17 Subcontracts.

3.17.1 The Contractor shall not be permitted to subcontract any of the work to be performed under the Contract without the written consent of the City, submission of the First-Tier Subcontractor Disclosure Form as required prior to the Bid opening deadline and verification that the Subcontractor has filed a Public Works Bond, when required, with the Construction Contractors Board prior to beginning

any work on the Project. The Contractor shall not employ any subcontractor that the Project Manager may object to due to subcontractor lacking the capability of performing work of the type and scope anticipated. No changes will be allowed from the approved subcontractor list without approval of the Project Manager.

3.17.2 The Contractor agrees to be as fully responsible to the City for the acts and omissions of the Contractor's subcontractors or of any persons either directly or indirectly, employed by Contractor's subcontractors as Contractor is for the acts and omissions of persons directly employed by Contractor.

3.17.3 Nothing contained in the Contract Documents shall create any contractual relation between any subcontractor and the City.

3.18 Unforeseen Difficulties. The Contractor shall protect the work and materials from damage due to the nature of the work, the elements, carelessness of other contractors or from any cause whatever until completion and acceptance of the Project. All loss or damages arising out of the nature of the work to be done under the Contract Documents, from any unseen obstruction or defects which may be encountered in the prosecution of the work, or from the action of the elements, shall be sustained by the Contractor.

3.19 Work During an Emergency. The Contractor shall be responsible for and must have resources available for all emergency work which might occur on the Project under construction for which the Contractor is responsible. The Contractor shall perform any work and furnish and install any materials and equipment necessary during an emergency endangering life or property. In all cases the Contractor shall notify the Project Manager of the emergency as soon as practicable, but the Contractor shall not wait for instructions before proceeding to properly protect both life and property.

3.20 Oral Agreements. No oral order, objection, claim or notice by any party to the others shall affect or modify any of the terms or obligations contained in any of the Contract Documents. No provision of the Contract Documents shall be held to be waived or modified by reason of any act whatsoever, other than by a definitely agreed waiver or modification thereof in writing. No evidence shall be introduced in any proceeding of any other waiver or modification.

3.21 Liens and Claims Against Contractor. The Contractor shall not permit any lien or claim to be filed or prosecuted against the City on account of any labor or material furnished under this Contract whether the same be furnished by the Contractor or any Subcontractor. If the Contractor fails, neglects or refuses to make prompt payment of any claim for labor or services furnished to the Contractor or a Subcontractor by any person in connection with the Contract as such claim becomes due, the City may pay such claim to the person furnishing the labor or services and charge the amount of the payment against funds due or to become due to the Contractor under this Contract. The payment of a claim in this manner does not relieve the Contractor or its surety from obligation with respect to any unpaid claims.

Any claim, by a person claiming to have supplied labor or materials for the performance of the work, for payment asserted against the Contractor’s payment bond must be asserted in conformity with ORS 279C.600 et. Seq.

4. MATERIALS AND WORKMANSHIP

4.1 Materials to be Reviewed Before Use.

4.1.1 Only materials conforming with the specified requirements and conditionally accepted by the Project Manager shall be used in the Project.

4.1.2 Before any material to be used in the Project is delivered, the Contractor shall advise the Project Manager of the source from which the material is to be obtained, furnish such samples as may be required for testing purposes, and receive the Project Manager's conditional acceptance for the use of that particular material. The conditional acceptance of any source of supply by the Project Manager does not imply that all material from that source will be accepted. Should material from any conditionally accepted source fail to maintain a quality meeting the requirements of the Specifications, use of material from that source shall be discontinued and the Contractor shall furnish acceptable material from other sources. Regardless of the source, any material delivered for the Project which fails to meet the requirements will be rejected. Only material meeting all requirements will be allowed to be incorporated in the Project. Any material or item incorporated in the Project which does not meet requirements of the Contract Documents, even if it was used with the consent and/or the presence of an inspector, shall be removed and acceptable material shall be used in its place, with all costs related to such removal and installation being borne by the Contractor.

4.1.3 Any material which, after conditional acceptance, has for any reason become unsuitable for use shall be rejected and not used.

4.2 Tests of Materials.

4.2.1 All tests of materials shall be made in accordance with acceptable methods as described and designated in the Specifications. When tests of materials are required, such tests shall be made by a testing laboratory accepted by the Project Manager and at the expense of the Contractor. The Contractor shall afford such facilities as may be required for collecting and forwarding samples and shall hold the materials represented by the samples until tests have been made and the materials found equal to the requirements of the Specifications or to approved samples. The Contractor in all cases shall furnish the required samples without charge.

4.2.2 In the absence of any definite Specification or reference to a Specification in the Technical Specifications or in the Special Provisions for the particular Project involved, it shall be understood that such materials shall meet the Specifications and requirements of the American Society for Testing Materials. Unless otherwise specified, all tests of materials shall be made in accordance with the methods prescribed by the American Society for Testing Materials.

4.2.3 In cases where compliance of materials or equipment with Contract requirements is not readily determinable through inspection and tests, the Project Manager shall request the Contractor provide properly authenticated documents, certificates or other satisfactory proof of compliance. These documents, certifications and proofs must cover performance characteristics, materials or construction and the physical or chemical characteristics of materials.

4.2.4 If the Specifications require, or the Contractor's request is approved by the Project Manager, inspection or testing may take place away from the job site. The additional cost to the City for such remote inspection or testing includes travel and subsistence expenses and will be paid by the Contractor through a reduction in payment to the Contractor equal to the travel and subsistence expenses. In the event the remote inspection or testing is not specified and is required by the City, the required travel and subsistence expense will be paid for by the City.

4.3 Storage of Materials. Materials shall be so stored as to insure the preservation of their quality and fitness for the Project. When considered necessary, they shall be placed on wooden platforms or other hard, clean surfaces, and not on the ground, and/or they shall be placed under cover. Stored materials shall be located so as to facilitate prompt inspection. Private property shall not be used for storage purposes without the written permission of the City and the private property owner.

4.4 Character of Workers. The Contractor shall at all times be responsible for the conduct and discipline of Contractor's employees and/or any subcontractor or persons employed by subcontractors. All workers must have sufficient knowledge, skill and experience to properly perform the work assigned to them. Any foreman or worker employed by the Contractor or Subcontractor who, in the opinion of the Project Manager, does not perform the work in a skillful manner, appears to be incompetent or acts in a disorderly or intemperate manner shall, at the written request of the Project Manager, be removed from work on any portion of the Project except as allowed by the Project Manager.

4.5 Construction Means, Methods, Techniques, and Procedures. The Contractor shall have the full power and authority to select the means, methods, techniques and procedures for performing the work covered under the Contract, provided said means, methods, techniques and procedures are in strict compliance with the requirements of all local, state and federal authorities and with these Specifications, and are not in conflict with the recommended installation practices of the manufacturers who are the suppliers of the materials to be utilized on the contemplated Project. The construction means, methods, techniques and procedures utilized shall produce a satisfactory quality of workmanship and shall be adequate to maintain the schedule of progress as required under the provisions of these Specifications.

4.6 Contractor's Tools and Equipment. The Contractor's tools and equipment used on the work covered under the Contract shall be furnished in sufficient quantity and of a capacity and type that will safely perform the work specified, and shall be maintained and used in a manner that will not create a hazard to persons or property, or cause a delay in the progress of the work.

4.7 Rejected Materials and Work. Any material supplied by the Contractor which is condemned or rejected by the Project Manager or the Project Manager's authorized representative because of non-conformity with the Contract Documents shall be removed at once from the vicinity of the Project by the Contractor at his own expense, and the same shall not be used on the Project. Any defective work whether the result of poor workmanship, use of defective materials, damage through carelessness or any other cause shall be removed within ten (10) calendar days after written notice is given by the Project Manager, and the work shall be re-executed by the Contractor at his own expense.

4.8 Unnoticed Defects. Any defective work or materials furnished by the Contractor and discovered by the Project Manager before the Project has been given final acceptance or final payment has been made, or during the guarantee period, shall be removed and replaced by work and materials which shall conform to the provisions of the Contract Documents. Failure on the part of the Project Manager or his representative to condemn or reject bad or inferior work or materials shall not be construed to imply acceptance of such work or materials.

4.9 Right to Retain Imperfect Work. If any part or portion of the work done or material furnished by the Contractor under the Contract proves to be defective and not in accordance with the Plans and Specifications, and if the imperfection in the same is not of sufficient magnitude or importance as to make the work dangerous or unsuitable, or if the removal of such work will create conditions which are dangerous or undesirable, the City shall have the right and authority to retain such work but shall make such deductions in the payment therefore as may be just and reasonable.

4.10 Correction of Defective Work. When, and as often as the Project Manager determines through its inspection procedures, material, equipment or workmanship incorporated in the Project do not meet the requirements of the Contract, the Project Manager may give notice of the noncompliance to the Contractor in writing. Within five (5) calendar days of receipt of such notice, the Contractor shall undertake all work necessary to correct the deficiency and to comply with the Contract. The Contractor agrees to pay all costs of correcting the defective work, including wages and overhead charges for inspection. If the Contractor disagrees with the Project Manager's determination and believes the corrective work should be covered by a Change Order, the Contractor shall immediately notify the City, in writing, setting forth the basis for its position. The City will review the matter and notify the Contractor, in writing, of its determination within thirty (30) calendar days after receipt of the Contractor's notification. If the City determines the corrective work is required to comply with the Contract, the Contractor shall proceed with such work.

As a condition precedent to the Contractor's claim for either additional compensation or time extension or both resulting from the performance of such corrective work, the Contractor shall, within fifteen (10) calendar days after receipt of the City's determination, notify the City in writing of its intent to claim additional compensation, time or both. The Contractor shall document all cost information associated with the corrective work and shall submit such information to the Project Manager on a monthly basis. Receipt of the cost data by the Project Manager does not constitute an

Acceptance of the corrective work or an authorization for a Change Order to cover the corrective work.

4.11 Cutting and Patching. The Contractor shall do, or be responsible for, all cutting, fitting or patching that may be required by, shown on or reasonably implied by the Plans and Specifications. Any defective work performed or material furnished by the Contractor, which is discovered by the Project Manager before final acceptance of the Project or before final payment has been made, shall be removed and replaced or patched at the Contractor's expense in a manner approved by the Project Manager or his representative.

4.12 Cleanup.

4.12.1 As the Project progresses and immediately after completion of the Project, the Contractor shall clean up and remove all refuse and unused materials of any kind resulting from the Project. If the Contractor fails to commence the cleanup within 24 hours after being directed to do so by the Project Manager, the Project Manager may have the cleanup performed by others. The cost shall be borne by the Contractor and may be deducted from payments due or to become due the Contractor.

4.12.2 After the Project is completed and before final acceptance of the Project, all areas affected by the Project shall be neatly finished and all equipment, temporary structures, rubbish and waste shall be removed from the Project area.

4.13 Guarantee.

4.13.1 The Contractor shall fully warrant all work for at least one (1) full calendar year from the City's Final Acceptance of the Project, regardless of the length of manufacturers' or installers' warranties.

4.13.2 In addition to any other warranties that are required, the Contractor shall make all necessary repairs and replacements to remedy any and all defects, breaks or failures of the work occurring within one (1) calendar year following the date of the City's Final Acceptance due to faulty or inadequate materials or workmanship. Such repairs and replacements must conform to the Contract Specifications under which the Contractor originally performed the work.

4.13.3 In the event of a dispute regarding any portion of the work, the Contractor shall nonetheless provide any warranty service, repairs or replacements as described in Paragraphs 4.13.1 and 4.13.2 above, for that portion of the work that is not in dispute. In the event a dispute delays the City's Final Acceptance of the work, the warranty for portions of the work not in dispute runs from the date of the City's Final Acceptance of the remaining portions of the work.

4.13.4 The Contractor shall also repair any damage or remedy any disturbance to other publicly owned property or improvements thereon if caused by the Contractor's work and if the damage or remedy occurs during the warranty period.

4.13.5 If the Contractor performs warranty work, then the warranty work for repetitive defects in materials, workmanship or equipment also shall have a one (1) calendar year warranty period from the date of its completion and the City's Final Acceptance of that work. The Contractor shall continue to provide warranty work pursuant to the terms of the Contract until the defects are completed and the City provides notice of its Final Acceptance of the work.

4.13.6 The City shall provide the Contractor with written notice of the need to perform warranty work unless it is determined that an emergency exists, that delay would cause serious additional loss or damage, or if any delay in performing the work might cause injury to any member of the public. If the Contractor, after written Notice, fails within ten (10) calendar days to comply with the City's request, the City has the right to perform the warranty work either by hiring another Contractor or by using its own forces. In either event, the Contractor and its Surety remain liable to the City for the cost of the work performed and any additional damage suffered by the City.

4.13.7 The Contractor shall provide a bond during the one (1) calendar year warranty period to guarantee the Contractor's performance of warranty work. The Contractor shall provide to the City a bond in the amount of 20% of the final Contract Amount in one of the following ways:

4.13.7.1 Continuance of the Contract performance and payment bond.

4.13.7.2 Any new performance and payment bond, acceptable to the City, which covers the Contractor's warranty obligations imposed by the Contract Documents.

4.13.7.3 Cash deposit to the City Finance Department. A receipt from the City Finance Director constitutes proof of the deposit.

4.13.7.4 Other arrangements proposed by the Contractor that the City finds acceptable in the City's sole discretion.

5. <u>INSURANCE, LEGAL AND FINANCIAL RESPONSIBILITY, AND PUBLIC SAFETY</u>

5.1 Insurance.

5.1.1 Policy Requirements. The insurance policies specified herein shall be approved as to form by the City. Contractor shall deliver a certificate of all required policies to City upon execution of the Contract Documents and prior to commencement of any work under the Contract. If requested by the City, Contractor shall furnish the City with executed copies of such policies of insurance. Coverage provided by the Contractor must be underwritten by an insurance company deemed acceptable to the City. Insurance coverage shall be provided by companies admitted to do business in Oregon and rated A- or better

by AM Best. A thirty (30) day notice of cancellation, termination or non-renewal in coverage clause shall be included in all insurance policies. Failure to maintain any required insurance coverage in the minimum required amount shall constitute a material breach of the Contract and shall be grounds for immediate termination of the Contract. If the insurer is unwilling or unable to provide such commitment, the Contractor shall provide the City with the relevant sections of its policies describing how the insurer may reduce, modify or cancel the insurance. Furthermore, the Contractor has an affirmative duty to provide the City with any notice the Contractor receives regarding the reduction, modification or cancellation of its insurance within 24 hours of Contractor's receipt of such notice. All policies required by these provisions shall:

5.1.1.1 also name the City as an additional insured, protecting City from any and all claims, losses, actions or omissions of Contractor or as a result of the joint concurring or contributory act, omission or negligence of Contractor and City arising with or related to activities specified under the Contract;

5.1.1.2 be written as primary policies, not contributing with, or in excess of, any coverage City may have; and

5.1.1.3 have loss payable clauses in favor of and reasonably satisfactory to City.

5.1.2 Commercial General Liability Insurance. During the performance of the Contract, Contractor shall obtain and maintain continuously in effect a commercial general liability insurance policy, including personal and advertising injury liability and products, completed operations and construction site coverage, with a combined single limit per occurrence of not less than $2,000,000.The aggregate limit shall not be less than $4,000,000.The policy shall be endorsed to state that the aggregate limit of liability shall apply separately to the Contract. Coverage may be written in combination with Commercial Automobile Liability Insurance with separate limits for Commercial General Liability and Commercial Automobile Liability. If available, such policy shall contain a contractual liability endorsement to cover Contractor's indemnification obligations under the Contract. Claims Made policies will not be accepted.

5.1.3 Commercial Automobile Liability Insurance. At all times during the term of the Contract, and at the sole expense of Contractor, Contractor shall maintain continuously in effect, "Symbol 1" commercial automobile liability coverage covering all owned, non-owned and hired vehicles. This coverage may be written in combination with the Commercial General Liability Insurance with separate limits for Commercial Automobile Liability and Commercial General Liability. Combined single limit per occurrence shall not be less than $2,000,000. If this coverage is written in combination with the Commercial General Liability, the aggregate limit for Commercial General Liability shall not be less than $4,000,000 and the policy shall be endorsed to state that the aggregate limit of Commercial General Liability shall apply separately to the Contract.

5.1.4 Workers Compensation. At all times during the term of the Contract, and at the sole expense of the Contractor and Subcontractors, the Contractor and all Subcontractors shall comply with ORS 656.017, which requires them to provide Workers Compensation coverage for all their subject workers.

5.1.5 Pollution Liability. Contractor or appropriate Subcontractor shall obtain, at their expense, and keep in effect during the term of the Contract, Pollution Liability Insurance covering their liability for bodily injury, property damage and environmental damage resulting from sudden accidental or gradual pollution and related cleanup costs incurred by the Contractor or appropriate Subcontractor, all arising out of the work or services (including the transportation risk, when applicable) to be performed under the Contract. Combined single limit per occurrence shall not be less than $2,000,000, with an annual aggregate limit of not less than $4,000,000. If available, such policy shall contain a contractual liability endorsement to cover Contractor's indemnification obligations under the Contract. Claims Made policies will not be accepted.

5.2 Indemnification. The Contractor shall hold the City harmless from, and indemnify it for, all loss, costs, claims, demands, damages, suits, actions and judgments for property damage and/or personal injury, including death, arising out of the Project or performance under the Contract by the Contractor's agents or employees, or any of them. In any event any such action or claim is brought against City, Contractor shall, if City so elects, upon tender by City, defend the same at Contractor's sole cost and expense, promptly satisfy any judgment adverse to City or to City and Contractor jointly and reimburse City for any loss, costs, damage or expense (including legal fees) suffered or incurred by City.

5.3 Taxes and Charges. The Contractor shall pay state and local sales and use taxes on all items as required by the laws and statutes of the state and its political subdivisions. The Contractor shall withhold and pay any and all withholding taxes, whether state or federal; pay all social security charges and state unemployment compensation charges; and pay or cause to be withheld, as the case may be, any and all taxes, charges, fees or sums whatsoever which are now or may hereafter be required to be paid or withheld under the laws.

5.4 Bid Bond, Payment Bond, Performance Bond and Public Works Bond.

5.4.1 Contracts for Under $25,000.00. Except when required by the Purchasing Agent, and except for public improvement contracts, bids on all public contracts under twenty-five thousand dollars ($25,000.00) are exempt from the requirements for a Bid Bond, a Performance Bond to assure performance of the Contract and a Payment Bond to assure payment of the obligations incurred in the performance of the Contract. The Information for Bidders shall state when Bonds are required for contracts under $25,000.00.

5.4.2 Contracts for $25,000.00 or More. Except for public improvement contracts, or except when waived by the Council, bids on all public contracts of twenty-five thousand dollars ($25,000.00) or more, shall be accompanied by a

Bid Bond, and the Contractor shall post a Performance Bond to assure performance of the Contract and a Payment Bond to assure payment of the obligations incurred in the performance of the Contract. The Information for Bidders shall state when the requirement for Bonds have been waived for contracts of $25,000.00 or more.

5.4.3 Public Improvement Contracts & Contracts for Highways, Bridges and Other Transportation Projects:

5.4.3.1 Bids on Public Improvement contracts for one hundred thousand dollars ($100,000.00) or less, and contracts for highways, bridges and other transportation projects for fifty thousand dollars ($50,000.00) or less, are exempt from the requirement of a Bid Bond, a Performance Bond and a Payment Bond.

5.4.3.2 Bids on Public Improvement contracts for more than one hundred thousand dollars ($100,000), and contracts for highways, bridges and other transportation projects for more than fifty thousand dollars ($50,000), must be accompanied by a Bid Bond, Performance Bond and Payment Bond.

5.4.4 Emergency Contracts. For all contracts awarded under Roseburg Municipal Code Subsection 3.06.025(F), the City Council or the Purchasing Agent may waive the requirements for Bid Bond, the Payment Bond and the Performance Bond. Upon receiving the Purchasing Agent's report regarding the emergency conditions necessitating waiver, as required by Roseburg Municipal Code Subsection 3.06.025(F), the Council may modify or reject the Purchasing Agent's decision to waive Bond requirements.

5.4.5 Public Works Bond. Before beginning work on a public works contract, a contractor or subcontractor, unless exempt under ORS 279C.800 to 279C.870, shall submit a $30,000 Public Works Bond to the Construction Contractors Board and certify to the City that such Bond has been submitted. In case of an emergency, or when the City's interest or property would probably suffer material injury by delay or other cause, the requirement to file a Public Works Bond may be excused if the Purchasing Agent has declared an emergency under Roseburg Municipal Code Section 3.06.025.

5.4.6 Submittal and Return of Bid Bonds. When required by the above Subparagraphs, the Bid Bond shall accompany the bid in the form of cash, certified check, cashier's check, irrevocable letter of credit or Bid Bond in a form approved by City, and in an amount equal to ten percent (10%) of the total amount of the bid. There shall be no exceptions to this provision. All required Bid Bonds, excepting that of the Contractor submitting the successful bid, will be returned within thirty (30) calendar days after the Contract has been awarded. The Bid Bond from the successful Contractor will be retained until bidder has entered into a satisfactory Contract with the City, and when required, furnished a Performance Bond to assure performance of the Contract, a Payment Bond to assure payment

of the obligations incurred in the performance of the Contract and the Public Works Bond Confirmation form executed by the Contractor. Should the successful bidder fail or refuse to execute the Contract and/or furnish the Payment Bond, Performance Bond or Public Works Bond Confirmation form as required, the Bid Bond deposited by said bidder shall be retained as liquidated damages by the City.

5.4.7 Bond Form. The form of all bonds required by the City shall be as the City may prescribe, and shall be with a Surety company satisfactory to the City and authorized to do business in the State of Oregon. Bonds shall be in force for one year after acceptance of the completed Project to cover all guarantees against defective materials and workmanship and all claims by subcontractors or third parties for services or materials provided to Contractor or Contractor's Subcontractors.

5.5 Royalties and Patents. The Contractor shall pay all royalty and license fees, unless otherwise specified. The Contractor shall defend all suits or claims for infringement of any patent rights and shall save the City and the Project Manager harmless from loss on account thereof.

5.6 Permits and Licenses.

5.6.1 The Contractor shall apply for and obtain, but the City shall cover the cost of, all rights-of-way permits, easements, franchises, highway crossing permits and railroad crossing permits as required. The Contractor shall comply with all specifications or requirements stipulated in the permits granted to the City.

5.6.2 The Contractor shall obtain at Contractor's expense, all other permits (such as building permits, burning permits, blasting permits and safety permits), licenses and inspection fees necessary for construction purposes as required by appropriate local, county, state or federal laws and/or ordinances. The Contractor shall also be registered to do business with the City of Roseburg prior to beginning work on the Contract.

5.7 Laws to be Observed. The Contractor shall keep fully informed of all local and county ordinances, state and federal laws in any manner affecting the Project herein specified. Contractor shall at all times comply with said ordinances, laws and regulations, and the City's Standard Contract Provisions in Exhibit "A" of the Construction Contract; and protect and indemnify the City and City's officers and agents against any claim or liability arising from or based on the violation of any such laws, ordinances, provisions or regulations.

5.8 Safety.

5.8.1 The Contractor will be solely and completely responsible for conditions of the jobsites, including safety of all persons and property during work on the Project. This requirement will apply continuously and not be limited to normal working hours. Safety provisions shall conform to all applicable federal, state, county and local laws, ordinances and codes. The Contractor shall comply with

ORS 279C.505(2) drug testing program requirements at all times throughout the completion of the Project.

5.8.2 The Contractor shall also comply with the "U.S. Department of Labor Occupational Safety and Health Act", the "Construction Safety Act" administered by the U.S. Department of Labor, and the "Manual of Accident Prevention in Construction" published by the Associated General Contractors of America, except where these are in conflict with state laws, in which case the more stringent requirement must be followed.

5.8.3 Contractor shall comply with all federal, state and local safety requirements, including but not limited to regulations pertaining to health hazard notification, control of hazardous energy, use of hazardous substances, handling and disposal of hazardous waste, removal and disposal of asbestos, entry into and work in confined spaces and handling of materials containing lead. City will notify Contractor of any hazardous conditions of which City is aware and will provide Contractor with information about City's safety and hazard notification programs. Such notification from the City does not relieve Contractor of any responsibility under the Contract or under federal or state statute, regulation or common law to inform itself of existing and potential hazards, to communicate those hazards to its employees, and to use all reasonable steps to minimize the risk of harm to its employees, other workers and the public.

5.8.4 The Contractor shall maintain at the jobsite all articles necessary for giving first aid to the injured and shall establish the procedure for the immediate removal to a hospital or a doctor's care of persons (including employees) who may be injured on the jobsite.

5.8.5 The duty of the Project Manager to conduct construction review of the Contractor's performance is not intended to include review of the adequacy of the Contractor's safety measures in, on or near the construction sites.

5.8.6 If death, serious injuries or serious damages are caused, the accident shall be reported immediately by telephone or messenger to both the Project Manager and the City. In addition, the Contractor must promptly report in writing to the Project Manager all accidents whatsoever arising out of, or in connection with, work on the Project or adjacent to the sites, giving full details and statements of witnesses.

5.8.7 If any claim is made by anyone against the Contractor or any Subcontractor because of any accident, the Contractor shall promptly report the facts in writing to the Project Manager, giving full details of the claim.

5.9 Equal Opportunity Clause. The provisions of Executive Order 11246 of September 24, 1965, and the Rules and Regulations issued therein are hereby incorporated by reference, and the Contractor agrees, by acceptance of the Contract, to comply with such Executive Order, rules, regulations and amendments thereto, to the extent the same are applicable to the contracting and/or subcontracting of services or work hereunder.

5.10 Warning Signs and Barricades. The Contractor shall provide adequate signs, barricades and lights and take all necessary precautions for the protection of the work under the Project and the safety of the public. All barricades and obstructions shall be protected at night by signal lights which shall be kept burning from sunset to sunrise. Barricades shall be of substantial construction and shall be painted white or whitewashed to increase their visibility at night. Suitable warning signs shall be so placed and illuminated at night as to show in advance where construction, barricades or detours exist.

5.11 Flaggers. In addition to furnishing and maintaining adequate signs, barricades and lights, the Contractor is required to furnish any and all flaggers that are required to control traffic. The City is hereby specifically exempted from furnishing any flaggers for the Project. If flaggers are required on any jobsite, they shall be supplied by the Contractor at no additional cost to the City.

5.12 Public Safety and Convenience. The Contractor shall at all times conduct work on the Project so as to insure the least possible obstruction to traffic and inconvenience to the general public and residents in the vicinity of the Project, and to insure the protection of persons and property in a manner satisfactory to the Project Manager. No road or street shall be closed to the public except with the permission of the Project Manager and proper governmental authority. Temporary provisions shall be made by the Contractor to insure the use of sidewalks and the proper functioning of all gutters, sewer inlets, drainage ditches and irrigation ditches, which shall not be obstructed except as approved by the Project Manager.

5.13 Protection of Work and City's Property. The Contractor shall at all times safely guard the City's property and equipment from injury or loss in connection with Contractor's work under the Contract. The Contractor shall at all times safely guard and protect the Project and adjacent property (as provided by law and the Contract Documents) from damage. Contractor shall be responsible for any damage to the City's property and equipment which is a result of the Contractor's negligence.

5.14 Sanitary Provisions. The Contractor shall provide and maintain such sanitary accommodations for the use of its employees and those of its subcontractors as may be necessary to comply with the requirements and regulations of the local and state departments of health and as directed by the Project Manager.

5.15 Payment of Prevailing Wages on Public Works in Oregon.

5.15.1 The Contractor and all Subcontractors on the Project shall pay not less than the "prevailing rate of wage" as that term is defined in ORS 279C.800 to 279C.870, and if applicable, the Federal Prevailing Wage required under the Davis-Bacon Act (40 U.S.C. 3141 - 3148), whichever is higher. The determination and application of such prevailing rate of wage is provided for in ORS 279C.800 through 279C.870, and if applicable, the Davis-Bacon Act (40 U.S.C. 3141 - 3148).

5.15.2 If the Bureau of Labor has made no determination of the prevailing rate of wage, it shall be the obligation of the Contractor to determine the same by making application to the Bureau of Labor or otherwise.

5.15.3 The Contractor or the Contractor's surety and every Subcontractor or the Subcontractor's surety shall file certified statements with the City in writing using the form prescribed by the Commissioner of the Bureau of Labor and Industries certifying the hourly rate of wage paid each worker whom the Contractor or the Subcontractor has employed in the work under this Contract and further certifying that no worker employed upon such public work has been paid less than the prevailing rate of wage or less than the minimum hourly rate of wage specified in this Contract. The certified statement shall be verified by the oath of the Contractor or the Contractor's surety or Subcontractor or the Subcontractor's surety that the Contractor or Subcontractor has read the certified statement and knows the contents thereof and that the same is true to the Contractor's or Subcontractor's knowledge. The certified statements shall set out accurately and completely the payroll records for the prior week including the name and address of each worker, the worker's correct classification, rate of pay, daily and weekly number of hours worked, deductions made, and actual wages paid.

5.15.4 Each certified statement shall be delivered or mailed by the Contractor or Subcontractor to the City. A true copy of the certified statement shall also be filed at the same time with the Commissioner of the Bureau of Labor and Industries. Certified statements for each week during which the Contractor or Subcontractor employs a worker upon the public work shall be submitted once a month, by the fifth business day of the following month. Information submitted on certified statements may be used only to ensure compliance with the provisions of ORS 279C.800 to 279C.870 or the Davis-Bacon Act (40 U.S.C. 3141 - 3148), whichever applies.

5.15.5 As provided by ORS 279C.810, the contract amount threshold for application of the state prevailing wage rate law is $50,000.00.

5.16 Subcontractor and Supplier Agreements. The Contractor shall include in its subcontracts for property or services entered into by the Contractor and a first-tier subcontractor, including a material supplier, for the purpose of performing the Contract:

5.16.1 A payment clause that obligates the Contractor to pay the first-tier subcontractor for satisfactory performance under its subcontract within ten (10) calendar days of payment by the City out of such amounts as are paid to the Contractor by the City under the Contract; and

5.16.2 An interest penalty clause that obligates the Contractor, if payment is not made within thirty (30) calendar days after receipt of payment from the City, to pay to the first-tier subcontractor, an interest penalty on amounts due in the case of each payment not made in accordance with the payment clause included in the subcontract pursuant to this requirement. The Contractor or first-tier subcontractor shall not be obligated to pay an interest penalty if the only reason that the Contractor or first-tier subcontractor did not make payment when

payment was due, is that the Contractor or first-tier subcontractor did not receive payment from the City or Contractor when payment was due. The interest penalty shall be:

5.16.2.1 For the period beginning on the day after the required payment date and ending on the date on which payment of the amount is made; and

5.16.2.2 Computed at the rate specified in ORS 279C.515(2).

5.16.3 The Contractor shall include in each of its subcontracts, for the purpose of performance of the Contract condition, a provision requiring the first-tier subcontractor to include a payment clause and an interest penalty clause conforming to the standards set forth in this section and requiring each of its subcontractors to include such clauses in their subcontracts with lower-tier subcontractors or suppliers.

5.16.4 None of the provisions of this section are intended to prevent the Contractor or any subcontractor from including in its contracts, the provision described in ORS 279C.580 (5) and (6).

5.17 Application for and Processing of Subcontractor and Supplier Payments. The Contractor shall provide each first-tier Subcontractor, including a material supplier, with a standard form that the first-tier Subcontractor may use as an application for payment or as another method by which the Subcontractor may claim a payment due from the Contractor. The Contractor, except as otherwise provided in this Subsection, shall use the same form and regular administrative procedures for processing payments during the entire term of the subcontract. The Contractor may change the form or the regular administrative procedures the Contractor uses for processing payment if the Contractor:

5.17.1 Notifies the Subcontractor in writing at least forty-five (45) calendar days before the date on which the Contractor makes the change; and

5.17.2 Includes with the written notice a copy of the new or changed form or a description of the new or changed procedure.

6. PROGRESS AND COMPLETION OF PROJECT

6.1 Contract Time and Commencement of Construction. The Contractor shall be capable of commencing construction on the Project covered under the Contract within ten (10) calendar days after signing of the Construction Contract. The Contract shall be in effect from the time it is signed until the Project is complete and accepted by the City. During periods when weather or other conditions are unfavorable for construction, the Contractor shall pursue only such portions of the work that will not be damaged thereby. Contractor shall not construct any portion of the work during the time unfavorable conditions exist that are likely to adversely affect the quality or efficiency of the work. It is expressly understood and agreed by and between the Contractor and the City that the Contract time specified for completion of the work described herein is a reasonable

time, taking into consideration the average climatic and economic conditions and other factors prevailing in the locality of the work.

6.2 Preconstruction Conference. A preconstruction conference will be scheduled by the City prior to commencement of construction. The Contractor will be notified of the time and place of this conference and shall be required to attend. Ten (10) calendar days prior to the preconstruction conference, the Contractor shall provide to the Project Manager four (4) copies of a project work schedule for review and approval. The Contractor has an affirmative duty to update the construction schedule each time changes occur.

6.3 Prosecution of the Project.

6.3.1 It is expressly understood and agreed that the time of beginning, rate of progress and time of completion of the Project are of the essence of the Contract. The Contractor shall perform the construction of said Project with due diligence and at such a rate and in such a manner as, in the opinion of the Project Manager, is necessary for completion within the time set forth in Paragraph 4 of the Contract.

6.3.2 After commencement of construction on the Project by the Contractor, if the Contractor is delayed by reason of the failure of the City to provide sufficient materials for construction thereof or to provide continuous open right-of-way, then the completion date of said Project shall be extended to the extent that the Contractor is delayed in carrying on said Project by reason of such failure on the part of the City.

6.3.3 The Contractor shall arrange its work and dispose of materials so as to insure the least possible interference and inconvenience to the landowners on or beside whose property the construction is taking place, or to the public where the construction lies in or near a public thoroughfare. Contractor shall employ only such number of construction crews as are reasonably necessary to construct said Project within the allotted time. The City may require the employment of an additional crew or crews, if in its judgment it is necessary in order to complete said Project with the time required.

6.3.4 If the Contractor desires to carry on work at night or outside the regular hours, timely notice shall be given to the Project Manager to allow satisfactory arrangements to be made for inspecting the Project in progress.

6.4 Provisions for Delays:

6.4.1 Notice of Delays. Whenever the Contractor foresees any delay in the prosecution of the work, and in any event, immediately upon the occurrence of any delay which the Contractor regards as unavoidable, Contractor shall notify the Project Manager in writing on the probability of the occurrence of such delays, the probable duration and cause. The Contractor shall take immediate steps to prevent the occurrence or continuance of the delay. If this cannot be done, the Project Manager shall determine how long the delay will probably continue and

to what extent the prosecution and completion of the work are being delayed thereby. The Project Manager shall also determine whether the delay is to be considered avoidable or unavoidable and shall notify the Contractor of his/her determination. The Contractor shall not make a claim for delays that are not called to the attention of the Project Manager at the time of their occurrence.

6.4.2 Avoidable Delays Defined. Avoidable delays in the prosecution or completion of the work include, but are not limited to:

6.4.2.1 All delays that could have been avoided by the exercise of care, prudence, foresight and diligence on the part of the Contractor or its Subcontractor;

6.4.2.2 Delays that do not necessarily prevent or delay the prosecution of other parts of the work or the completion of the whole work within the time specified;

6.4.2.3 Reasonable delays resulting from time required by the City and Project Manager for approval of plans submitted by the Contractor and for the making of surveys, measurements, testing and inspections; and

6.4.2.4 Delays arising from interruptions occurring in the prosecution of the work on account of the reasonable interference from other contractors employed by the City which do not necessarily prevent the completion of the whole work within the time specified.

6.4.3 Unavoidable Delays Defined. Unavoidable delays in the prosecution or completion of the work include, but are not limited to, all delays (other than avoidable delays as defined above) that result from causes beyond the control of the Contractor and that could not have been avoided by the exercise of care, prudence, foresight and diligence on the part of the Contractor or its Subcontractors. Delays caused by other contractors employed by the City will be considered unavoidable delays only insofar as they interfere with the Contractor's completion of the work. Delays due to normal weather condition are not regarded as unavoidable delays insofar as they interfere with the Contractor's completion of the work. If the Project Manager determines the Contractor has experienced an unavoidable delay, and further that such delay has affected the controlling operations of the work, the City shall grant to the Contractor an extension of time for Contract performance, not to exceed the number of calendar days of unavoidable delay experienced by the Contractor. The Contractor has no remedy for unavoidable delay except as provided by this paragraph. Delays due to normal weather conditions are not regarded as unavoidable as the Contractor agrees to plan its work with prudent allowances for interference by normal weather conditions. Delays caused by acts of God, fire, unusual storms, flood, earthquakes, epidemics, quarantine restrictions, strikes, labor disputes and freight embargoes are considered unavoidable delays insofar as they interfere with the Contractor's completion of the work. Delays caused by shortages of

materials are considered unavoidable providing the Contractor can prove to the City that the Contractor has made reasonable and timely attempts to secure the material(s).

A rainstorm, windstorm, high water or other natural phenomenon for the specific locality of the work, which might reasonably have been anticipated from historical records of the general locality of the work, do not constitute unusually severe weather. For the purposes of this Contract, rainfall data is assumed to be the same as that measured at the Roseburg Regional Airport by the Environmental Data Service of the National Oceanic and Atmospheric Administration (NOAA) of the U.S. Department of Commerce.

6.4.4 Time Extension for Delays.

6.4.4.1 **Extensions for Avoidable Delays.** In case the work is not completed in the time specified, including extensions of time as may have been granted for unavoidable delays, the Contractor will be assessed damages for those costs incurred by the City that are attributable to the fact the work was not completed on schedule. The City may grant an extension of time for avoidable delay if the City deems it in its best interest. The Contractor shall compensate the City, in exchange for granting an extension of time for avoidable delay, for the actual costs to the City of Project management, inspection, general supervision and overhead expenses which are directly chargeable to the work and that accrue during the period of such extension. The actual costs do not include charges for final inspection and preparation of the final estimate by the City.

6.4.4.2 **Extensions for Unavoidable Delays.** For delays the Contractor considers unavoidable, the Contractor shall submit to the Project Manager, complete information demonstrating the effect of the delay on the controlling operation in its construction schedule. The submission must be made within ten (10) calendar days of the beginning of the occurrence which is claimed to be responsible for the unavoidable delay. The Project Manager shall review the Contractor's submittal and determine the number of calendar days of unavoidable delay, if any, and the effect of such delay on the controlling operations of the work. If the Project Manager determines the Contractor has experienced an unavoidable delay, and further that such delay has affected the controlling operations of the work, the City shall grant to the Contractor an extension of time for Contract performance, not to exceed the number of calendar days of unavoidable delay experienced by the Contractor. The Contractor has no remedy for the unavoidable delay except as provided in this Section. During such extension of time,

neither charges for the inspection nor administration nor damages for delay will be assessed against the Contractor. It is understood and agreed by the Contractor and the City that time extensions due to unavoidable delays involve controlling operations that would prevent completion of the whole work within the specified time.

If the Contractor disagrees with the Project Manager's determination, the Contractor may appeal such determination to the City Manager in accordance with Paragraph 3.4.2.

6.5 Changes in the Project. The City may, as the need arises, order changes in the Project through additions, deletions or modifications without invalidating the Contract. Compensation and time of completion affected by the change shall be adjusted at the time of ordering such change.

6.6 Extra Work. New and unforeseen items of work found to be necessary but which cannot be covered by any item or combination of items for which there is an established Contract price, shall be classified as extra work. Upon written order from the City and approval from the Project Manager, the Contractor shall do such extra work as may be required for the proper completion or construction of the whole Project contemplated. In the absence of such written order, no claim for extra work shall be considered. Extra work shall be performed in accordance with these Specifications where applicable and work not covered by the Specifications or special provisions shall be done in accordance with the best practice as approved by the Project Manager. Extra work required in an emergency to protect life and property shall be performed by the Contractor as required. Contractor shall notify the Project Manager of the emergency as soon as possible, but shall begin work prior to providing notice if immediate work is necessary to protect life or property.

6.7 Unforeseen Difficulties. A delay beyond the Contractor's control occasioned by an act of God, or by strikes, lockouts, fire, etc., may entitle the Contractor to an extension of time to complete the Project as determined by the Project Manager, provided however, that the Contractor shall immediately give written notice to the Project Manager of the cause of such delay. In no event shall the Contractor be entitled under the Contract to collect or recover any damages, loss or expense incurred by any delay other than as caused by the City as stipulated hereinabove in Subsection 6.3 "Prosecution of the Project".

6.8 Use of Completed Portions. The City shall have the right to take possession of and use any completed or partially completed portions of the Project. Such use shall not be considered as final acceptance of any portion of the Project, nor shall such use be considered as cause for an extension of Contract completion time unless authorized by a change order issued by the City.

6.9 Liquidated Damages. If the Contractor fails to complete the work, or any part thereof, in the time agreed upon in the Contract or within such extra time as may have been allowed for delays by extensions granted as provided in the Contract, the Contractor

shall reimburse the City for the additional expense and damage for each calendar day that the Contract remains uncompleted after the Contract completion date. It is agreed that the amount of such additional expense and damage incurred by reason of failure to complete the Contract is the per diem rate as stipulated in the Bid. The amounts are hereby agreed upon as liquidated damages for the loss to the City.

It is expressly understood and agreed that this amount is not to be considered in the nature of a penalty but as damages for delay which have accrued against the Contractor. The exact amount of damage that would be sustained by the City due to delay is difficult, if not impossible, to accurately ascertain, but the parties believe the specified amount of liquidated damages to be a reasonable forecast of the damage for delay that the City would likely sustain. Such liquidated damages are in addition to any other ascertainable damage, other than for delays that the City sustains for Contractor's breach of the Contract. The City may deduct such damages from any amount due, or that may become due the Contractor or the amount of such damages becomes due and may be collected from the Contractor of is Surety.

6.10 Substantial Completion. Substantial Completion shall have the meaning set forth in Subsection 1.1 "Definitions" of these General Conditions.

Upon consideration by the Contractor that a determination of Substantial Completion of the Project, or a designated portion thereof, is completed, the Contractor shall so notify the Project Manager in writing. This notice shall include the Contractor's list of any minor incomplete contract work items to finish the Project. Upon receipt of the written notification, the Project Manager will promptly, by personal inspection, determine the actual status of the work in accordance with the terms of the Contract. If the Project Manager finds that the terms of Substantial Completion of the Contract have not yet been met, the Project Manager will so inform the Contractor. If, instead, the Project Manager determines from the inspection that the work, or the designated portion thereof, has met the terms of Substantial Completion, the Project Manager will issue to the Contractor a "Written Notice of Substantial Completion" along with a Punch List of any deficient work items needing repair or correction. The Contractor agrees to complete all such corrective work within thirty (30) calendar days after submission of the Punch List to the Contractor by the Project Manager. If the Contractor fails to complete the corrective work within the thirty (30) calendar days, the Contractor is liable to the City in the amount stated in the liquidated damages section of the Contract for each day thereafter until all corrective work is completed. The City shall be entitled to deduct liquidated damages from final payment.

6.11 Final Completion. The Contractor shall notify the Project Manager in writing requesting a designation of Final Completion at the completion of the punch list items related to the Substantial Completion designation, and at the completion of any other items necessary to the completion of the Project. The Project Manager will inspect these remaining items, and upon satisfactory completion, will issue a written "Notice of Final Completion" which shall be subject to the City's Final Acceptance. In the event some items are not ready for the City's Final Acceptance the City may, without waiving any of the City's right to the portion(s) of the Project not yet receiving Final Acceptance, nonetheless provide Final Acceptance for those portion(s) of the items of the Project the City deems

appropriate. As stated in Subsection 4.13, the terms of the guarantee commence on the date of the City's Written Notice of Final Acceptance for that portion of the work.

7. MEASUREMENT AND PAYMENT

7.1 General.

7.1.1 All work acceptably completed under the Contract shall be measured by the Project Manager according to United States Standard Measures, and the quantities of work performed or materials furnished shall be computed on the basis of such measurements.

7.1.2 The Contractor shall accept the compensation as herein provided in full payment for furnishing all materials not provided by the City and all labor, tools and equipment; for performing all work under the Contract; for all loss or damage arising from the nature of the Project other than unforeseeable environmental conditions as described in ORS 279C.525, the action of the elements or any unforeseen difficulties which may be encountered during the prosecution of the Project, until its final acceptance by the City.

7.2 Payments. The City shall make monthly progress payments within thirty (30) calendar days from the date of the pay request for work which has been completed and accepted by the City per ORS 279C.570.

7.3 Final Payment. The City shall retain five percent (5%) of all payments until the entire Project has been given Final Acceptance by the City. The entire Project must be accepted by the City prior to releasing retainage. Upon the City's acceptance of the entire Project, the retainage will be released and the Contractor shall be responsible for the workmanship and materials for one year thereafter as provided in Subsection 4.13.

If the contract price exceeds $500,000, the City will place amounts deducted as retainage into an interest-bearing escrow account. Interest on the retainage amount accrues from the date the payment request is approved until the date the retainage is paid to the Contractor.

7.4 City's Right to Withhold Payment. The City may withhold payment in whole or in part on an approved invoice to the extent necessary to protect City from loss due to any of the following causes discovered subsequent to approval of the invoice by the Project Manager or the Project Manager's representative:

7.4.1 Defective work;

7.4.2 Evidence indicating the probable filing of claims by other parties against the Contractor;

7.4.3 Failure of the Contractor to make payments to Subcontractors, material suppliers or workers; or

7.4.4 Damage to another contractor.

7.5 Payment for Uncorrected Work. Should the Project Manager direct the Contractor not to correct work that has been damaged or that was not performed in accordance with the Contract Documents, the City may make an equitable deduction from the amount due to the Contractor on the Project in order to compensate the City for the uncorrected work.

7.6 Payment for Extra Work. In any case where the Contractor deems additional compensation is due Contractor for work or materials not clearly covered in the Contract Documents or not ordered by the Project Manager according to provisions of the Contract Documents, the Contractor shall notify the Project Manager, in writing, of his intention to make a claim in order that such matters may be settled, if possible, or other appropriate action promptly taken. If such notification is not given, or the Project Manager is not afforded proper facilities by the Contractor for keeping strict account of actual cost, then the Contractor hereby waives the claim for such extra compensation. Such notice by the Contractor, and the fact that the Project Manager has kept account of the cost as aforesaid, shall not in any way be construed as proving the validity of the claim. Claims for additional compensation shall be made in itemized detail and submitted, in writing, to the City and Project Manager within ten (10) calendar days following completion of that portion of the Project for which the Contractor makes his claim. In case the claim is found to be just, it shall be allowed and paid under a supplemental agreement to be entered into between the parties to the Contract.

7.7 Release of Liens.

7.7.1 Before the City pays the Contractor for the work included under the Contract, the Contractor shall sign and deliver to the City a release of liens or claims sworn to under oath and duly notarized. The release shall state that the Contractor has satisfied all claims and indebtedness of every nature in any way connected with the Project, including but not limiting the generality of the foregoing, all payrolls, amounts due to subcontractors, accounts for labor performed and materials furnished, incidental services, liens and judgments.

7.7.2 If any lien or claim remains unsatisfied after payment to the Contractor is made, the Contractor shall refund to the City all monies that the City may be compelled to pay in discharging such a lien or claim, including all costs and reasonable attorneys' fees.

7.8 Acceptance of Payment Constitutes Release. The acceptance by the Contractor of a payment for the invoice shall release the City from all claims and liability to the Contractor for all things done or furnished in connection with the work specified on said invoice, and every act of the City and others relating to or arising out of the Project. No payment, however, final or otherwise, shall operate to release the Contractor or his Sureties from obligations under the Contract, the Performance Bond or the Payment Bond as herein provided.

7.9 Correction of Defective Work. The Project Manager's approval of the invoice for work completed and the City's payment to the Contractor on such invoice, shall not relieve the Contractor of the responsibility for faulty materials or workmanship on said work

during the one-year guarantee period as stipulated in Subsection 4.13. The one-year guarantee period for each portion of the Project begins when each portion of the Project receives written notice of Final Acceptance from the City. The City shall promptly give notice of faulty materials or workmanship which are discovered within the one-year guarantee period and the Contractor shall promptly replace any such defects. If the Contractor fails to make the repairs and replacements promptly, the City may do the work, and the Contractor and Contractor's Surety shall be liable for the cost thereof.

8. ENVIRONMENTAL MATTERS

8.1 Contractor Compliance. Contractor shall comply with, and require its Subcontractors to comply with, all applicable federal, state and local statues, ordinances, orders, rules and regulations relating to the protection of human health and environment, including but not limited to, the use, storage, release, spill, disposal or other handling of petroleum products and other hazardous substances.

8.2. Unanticipated Regulatory Compliance and Site Conditions.

8.2.1 If Contractor is delayed or additional work is required due to the enactment of new or an amendment to existing statutes, ordinances or regulations relating to the prevention of environmental pollution and the preservation of natural resources occurring after submission of the successful bid, City may, at its sole discretion:

8.2.1.1 terminate the Contract;

8.2.1.2 complete the Project itself;

8.2.1.3 use non-City forces already under contract with the City;

8.2.1.4 require that the underlying property owner be responsible for the additional work;

8.2.1.5 call for bids for a new contractor to provide the necessary services; or

8.2.1.6 issue Contractor a change order setting forth the additional work that must be undertaken.

8.2.2 If Contractor encounters a condition not referred to in the Contract Documents, not caused by Contractor and not discoverable by a reasonable pre-bid visual site inspection, and such condition requires compliance with the regulations referred to in Paragraph 8.2.1 above, Contractor shall immediately provide City notice of the condition. Except as required by any environmental or natural resource regulation, or, in case of an emergency, Contractor shall not commence work or incur any additional job site costs with regard to the condition encountered without written direction from the City. Upon request, Contractor shall estimate emergency or regulatory compliance costs as well as the

anticipated delay and costs resulting from the encountered condition, and promptly deliver such estimate to City for resolution.

8.2.3 In the event of an occurrence of an unanticipated site condition as described in Paragraph 8.2.2 above, City, within a reasonable period of time, may do any of the following at its sole discretion:

8.2.3.1 terminate the Contract;

8.2.3.2 complete the Project itself;

8.2.3.3 use non-City forces already under contract with the City;

8.2.3.4 require that the underlying property owner be responsible for the additional work;

8.2.3.5 call for bids for a new contractor to provide the necessary services; or

8.2.3.6 issue Contractor a change order setting for the additional work that must be undertaken.

8.2.4 In the event City terminates the Contract under Subparagraph 8.2.1.1 or 8.2.3.1, Contractor shall be entitled to all costs and expenses incurred to the date of the termination, including overhead and reasonable profits, on the percentage of the Project completed. Contractor shall not be entitled to profits or consequential damages on the uncompleted portion of the Contract. If the City chooses to issue a change order or terminate the Contract for either of the reasons set forth in Paragraph 8.2.1 or 8.2.3, Contractor agrees to provide the City access to Contractor's documentation used to prepare Contractor's bid in order to assist City in making the City's determination of the additional compensation to be paid.

9. CHANGE ORDERS.

9.1 Authorized Changes in the Work. Changes to the drawings, specifications, quantities or details of the Project are inherent in the nature of construction and may be necessary or desirable during the course of Project construction. Without impairing or invalidating the Contract, the City may at any time, without notice to any surety, by written order designed or indicated to be a Change Order or a Proposal Request, make any change in the work within the general scope of the Contract, including, but not limited to changes:

9.1.1 In the Plans and Specifications (including drawings and designs);

9.1.2 In the time, method, or manner of performance of the work;

9.1.3 In the City-furnished facilities, equipment, materials, services or site; or

9.1.4 Directing acceleration in the performance of the work.

9.2 Unauthorized Changes in the Work. The Contractor shall not be entitled to an increase in the Contract price or an extension of the Contract times with respect to any work performed that is not required by the Contract Documents as amended, modified or supplemented except in the case of an emergency. In the event of an emergency, the Contractor has seven (7) calendar days to notify the Project Manager of the nature and extent of the emergency. If notification is not provided within seven (7) calendar days, no time adjustment or cost compensation will be allowed.

9.3 Execution of Change Orders. The City and the Contractor shall execute appropriate Change Orders and Proposal Requests and upon receipt of an approved Change Order or Proposal Request, the Contractor shall perform the work as modified. If the Change Order increases the Contract amount, the Contractor shall notify Contractor's Surety of the increase and shall provide the City with a copy of any resulting modification to the Bond documents. Change Order and Proposal Requests shall clearly state all costs and schedule adjustments.

9.4 No Oral Change Orders. No oral order, statement or conduct of the City constitutes a Change Order or entitles the Contractor to an equitable adjustment.

9.5 Change of Contract Price.

9.5.1 The Contract price may only be changed by a Change Order.

9.5.2 The value of any work covered by a Change Order or of any claim for an adjustment in the Contract price will be determined as follows:

9.5.2.1 Where the work involved is covered by the unit prices contained in the Contract Documents, by application of such unit prices to the quantities of the items involved; or

9.5.2.2 Where the work involved is not covered by unit prices contained in the Contract Documents, by a mutually agreed lump sum; or

9.5.2.3 Where the work involved is not covered by the unit prices contained in the Contract Documents and agreement to a lump sum is not reached under Subparagraph 9.5.2.2, time and materials basis plus the Contractor's fee for overhead and profit as defined in Paragraph 9.5.3.

9.5.3 Percentage Allowances. For work negotiated and completed on a time and materials basis the Contractor's maximum allowable percentage markup of such costs shall be as follows:

Materials	15%
Equipment	15%
Labor	20%

Special Services 15%

9.5.3.1 When a subcontractor performs work under a time and materials Change Order, the Contractor will be allowed a supplemental markup of 5% on the subcontractor's charges.

9.6 Lump Sum Change Orders. Whenever practicable, changes in Contract price resulting from extra work will be determined by a mutually agreed-upon lump sum price. The Contractor's proposal for such changes must include a detailed breakdown of all labor and materials to be performed by its forces and by the forces of its Subcontractors and material suppliers.

Costs for labor, material, rentals, approved services, and for overhead and profit for the Contractor, Subcontractor and material suppliers must be calculated as specified under the Subsection 9.7.

When the City desires a price quotation from the Contractor for a proposed change to the Contract, the Project Manager will issue a Proposal Request describing the proposed changes. The Contractor shall respond with a price quote within ten (10) calendar days of the issuance of the Proposal Request.

Contractor's quotations for Change Orders and Proposal Requests must be in writing and firm for a period of thirty (30) calendar days. Any compensation paid in conjunction with the terms of a Change Order compromises the total compensation due the Contractor for the modification defined in the Change Order. By signing the Change Order or Proposal Request, the Contractor acknowledges that the stipulated compensation includes payment for the modification plus all payment for the interruption of schedules, extended overhead, delay or any other impact claim or ripple effect, and by such signing specifically waives any reservation or claim for additional compensation or claim for Contract time extension in respect to the subject Change Order or Proposal Request.

The City's request for quotations on modifications to the work is not considered authorization to proceed with the work prior to the approval of a formal Proposal Request or Change Order, and such request does not justify any delay in existing work.

9.7 Time and Material Change Orders. Whenever the Contractor is directed by written notice from the Project Manager as the City's representative, to perform extra work on a time and material basis, the Contractor shall furnish labor, equipment and materials necessary to complete the work in a satisfactory manner and within a reasonable period of time. For the work performed, payment will be made for the documented actual necessary expense of the following:

9.7.1 Field and office labor, including estimating and procurement personnel and foremen, who are directly assigned to the time and materials work (actual payroll cost, including wages, fringe benefits as established by law). The cost of labor includes any employer payment to or on behalf of the worker for health and welfare, pension, vacation and similar purposes. Where subsistence and travel allowances are required for performance of extra work, the charges consist of the

actual amount paid to each worker. No other fixed labor burdens will be considered unless approved in writing by the City.

9.7.2 Material delivered and used on the designated work, including sales tax, if paid by the Contractor or its Subcontractor.

9.7.3 Rental or equivalent rental cost of equipment, including necessary transportation, for items having a value in excess of $100. When equipment is not rented, the equivalent rental cost of equipment is based on the standard rental rates for Contractor-owned equipment, but in no event exceeds the rental rates set forth in the most current edition of the "Equipment Watch Rental Rate Blue Book", published by Penton Media. For equipment not listed in the Blue Book, the rental rate is as listed by the local section of the Associated General Contractors. If the equipment is not listed by the Associated General Contractors, the rental rate will be mutually agreed upon in writing between the Contractor and City prior to the use of the unlisted equipment. The reasonable cost of moving equipment onto and off the job site may be included, but equipment rental will not be paid when the equipment is inoperative due to breakdowns. Individual pieces of equipment or small tools having a replacement value of $100 or less are considered as included in the overhead allowances and no additional payment therefore will be made.

When equipment is used on the extra work for less than five (5) business days, hourly rates will be used. Less than thirty (30) minutes of operation are considered ½ hour of operation. When equipment is used on the extra work for more than five (5) business days, weekly rates apply. In this case, less than four (4) hours of operation is considered to be ½ calendar day of operation.

Rental or equivalent rental cost will be allowed for only those days or hours during which the equipment is in actual use. Rental and transportation allowances must not exceed the current rental rates prevailing in the locality. The rentals allowed for equipment are understood to cover all fuel, supplies, repairs, and renewals.

The City reserves the right to furnish such materials and equipment as it deems expedient, and the Contractor has no claim for profit or added fees on the cost of such materials and equipment.

9.7.4 The added fixed fees defined in Paragraph 9.5.3 constitute full compensation for the cost of general supervision, overhead, profit and any other general expense.

9.7.5 If a dispute occurs over payment for work provided on a time and material basis, the dispute is not cause for stopping work.

9.7.6 The Contractor shall maintain accurate and detailed records for all work performed on a time and materials basis. These records must reflect all the actual necessary expenses pertaining to the extra work and must at all times be available for audit by the City.

9.7.7 The Contractor shall make clear distinction in its records between the direct costs of work paid for on a time and materials basis and the costs of other work. The Contractor shall furnish the Project Manager report sheets in duplicate of each day's work that itemize the labor, materials and equipment used, and shall make the report sheets available for the City's review. The daily report sheet must provide names or identifications and classifications of workers, the hours worked, the sizes, types and identification numbers of equipment, and hours operated. Daily report sheets must be signed by the Contractor or its authorized agent and verified by the Project Manager.

9.7.8 To receive partial payments and final payment for time and materials work, the Contractor shall submit to the Project Manager, in a manner approved by the Project Manager, detailed and complete documented verification of the Contractor's and any of its Subcontractor's actual cost incurred. Material and rental charges must be substantiated by copies of vendors' invoices. Such costs must be submitted within thirty (30) calendar days after said work has been satisfactorily competed.

STEWART PARK PAVILION RENOVATION

PROJECT DATA:

LOCATION: 1700 W STEWART PARK DR ROSEBURG, OR 97471
MAP ID: 27061400100
TAX LOT: 00100
ZONING: PR (PUBLIC RESERVE)

CONSTRUCTION TYPE: VB

OCCUPANCY CATEGORY: ASSEMBLY GROUP A-4
TOTAL BUILDING AREA: 5244 SQ.FT.
NO CHANGE TO USE, OCCUPANCY, OR EGRESS

PROJECT TEAM:

OWNER: CITY OF ROSEBURG
PARKS DEPARTMENT
900 SE DOUGLAS
ROSEBURG, OR 97471

ARCHITECT: I.E. ARCHITECTURAL, LLC.
809 SE PINE ST
ROSEBURG, OR 97470
541.673.0166

01 VICINITY MAP
SCALE: NTS

A. GENERAL

1. THE DRAWINGS; GENERAL NOTES; SPECIFICATIONS; APPLICABLE LAWS, BUILDING CODES, ORDINANCES, REGULATIONS AND REQUIREMENTS OF AUTHORITIES HAVING JURISDICTION ARE INTEGRAL COMPONENTS OF THE CONTRACT DOCUMENTS DESCRIBING THE WORK. LAWS, CODES AND REQUIREMENTS OF AUTHORITIES HAVING JURISDICTION INCLUDE BUT MAY NOT BE LIMITED TO THE FEDERAL, STATE AND LOCAL BUILDING, PLUMBING, ELECTRICAL, AND ENERGY CONSERVATION CODES; LOCAL UTILITY COMPANIES REGULATIONS; AND HOMEOWNER'S ASSOCIATION RULES AND REGULATIONS.

2. THE CONTRACT DOCUMENTS ARE COOPERATIVE AND COMPLEMENTARY. ALL LABOR AND MATERIALS REQUIRED TO FULLY CARRY OUT THE WORK SHOWN IN THE DRAWINGS AND SPECIFICATIONS, AND TO PROVIDE A COMPLETE AND FULLY FUNCTIONING PROJECT, ARE PART OF THIS CONTRACT WHETHER OR NOT SPECIFICALLY DOCUMENTED, INCLUDING WORK REASONABLY INFERABLE FROM THE CONTRACT DOCUMENTS TO PROVIDE THE DESIGN INTENTION THEREIN.

3. THE CONTRACTOR SHALL PROVIDE ALL LABOR, SUPERVISION, MATERIALS, EQUIPMENT AND ACCESSORIES; AND SHALL COORDINATE, PROCURE, FABRICATE, DELIVER, ERECT, INSTALL AND/OR INTERFACE WITH ANY NEW OR EXISTING WORK; AND SHALL START AND TEST ALL WORK IN ORDER TO PROVIDE THE OWNER WITH A COMPLETE ASSEMBLIES AND/OR SYSTEMS.

4. INFORMATION IS NOT NECESSARILY REPEATED IN BOTH DRAWINGS AND NOTES OR SPECIFICATIONS; INFORMATION PROVIDED IN EITHER IS APPLICABLE.

5. THE TERM "CONTRACTOR' AS USED HEREIN REFERS TO THE GENERAL CONTRACTOR AND/OR CONSTRUCTION MANAGER WHO IS RESPONSIBLE FOR ALL COORDINATION AND SUPERVISION OF THE WORK, AND EXTENDS TO ALL SUBCONTRACTORS ENGAGED BY SAME.

6. ALL WORK IS REQUIRED TO CONFORM TO THE REQUIREMENTS OF THE LOCAL AND STATE BUILDING CODES. ANY WORK NOT CONFORMING TO BUILDING CODES SHALL BE CORRECTED AT THE EXPENSE OF THE CONTRACTOR AND AT NO EXPENSE TO THE OWNER.

7. ALL CONTRACTORS AND SUBCONTRACTORS REQUIRED BY THE LOCALITY OR STATE TO BE LICENSED TO PERFORM WORK SHALL CARRY SUCH LICENSES.

8. THE CONTRACTOR SHALL EXAMINE AND BE THOROUGHLY FAMILIAR WITH THE WORK DESCRIBED IN THE CONTRACT DOCUMENTS BEFORE THE COMMENCEMENT OF THE WORK.

9. THE CONTRACTOR SHALL COORDINATE THE WORK DESCRIBED IN THE CONTRACT DOCUMENTS, INCLUDING CIVIL, STRUCTURAL, MECHANICAL, ELECTRICAL, PLUMBING, AND OTHER SECTIONS OF THE CONTRACT DOCUMENTS. THE CONTRACTOR SHALL NOTIFY THE ARCHITECT OF ANY DISCREPANCIES FOUND BETWEEN OR AMONG DRAWINGS, GENERAL NOTES AND OTHER CONTRACT REQUIREMENTS, BEFORE COMMENCING WORK.

10. BEFORE SUBMITTING A PROPOSAL, THE CONTRACTOR SHALL VISIT THE PROJECT AREA AND FAMILIARIZE THEMSELVES WITH THE EXISTING CONDITIONS SO AS TO BE IN POSSESSION OF A FULL UNDERSTANDING OF THE JOB CONDITIONS AND SCOPE OF WORK REQUIRED BY THESE CONTRACT DOCUMENTS. THE CONTRACTOR SHALL VERIFY THESE CONDITIONS WITH THE CONSTRUCTION DOCUMENTS AND CHECK FOR ANY DISCREPANCIES OR INTERFERENCES. THE CONTRACTOR SHALL NOTIFY THE ARCHITECT IF ANY DISCREPANCIES OR INTERFERENCES ARE KNOWN TO EXIST BEFORE ENTERING INTO CONTRACT WITH THE OWNER. THE CONTRACTOR SHALL INCLUDE SUCH FULL UNDERSTANDING IN THEIR BID. FAILURE TO PROVIDE THE AFOREMENTIONED NOTIFICATIONS SHALL NOT RELIEVE THE CONTRACTOR FROM THE CONTRACTUAL OBLIGATIONS TO COMPLETE ALL WORK TO MEET THE INTENT OF THE CONTRACT DOCUMENTS, WITHOUT ADDITIONAL COST TO THE OWNER.

11. DO NOT SCALE DRAWINGS. WRITTEN DIMENSIONS AND NOTES SHALL GOVERN.

12. DRAWINGS AT A LARGER SCALE TAKE PRECEDENCE OVER DRAWINGS AT A SMALLER SCALE. DETAILS TAKE PRECEDENCE OVER PLANS AND ELEVATIONS. THE CONTRACTOR SHALL NOTIFY THE ARCHITECT OF ANY DIMENSIONAL DISCREPANCIES AND/OR CONFLICTS PRIOR TO COMMENCEMENT OF THE WORK.

13. THE CONTRACTOR SHALL BE RESPONSIBLE FOR ALL INSPECTIONS, CERTIFICATIONS, AND SIGN-OFF PROCEDURES AS REQUIRED BY THE AUTHORITIES HAVING JURISDICTION. BUILDING PERMIT(S) SHALL BE DISPLAYED PER THE REQUIREMENTS OF THE LOCAL BUILDING CODE.

14. THE CONTRACTOR SHALL MAINTAIN INSURANCE COVERAGE AS REQUIRED BY FEDERAL, STATE, AND LOCAL REGULATIONS AND BY HOMEOWNER'S ASSOCIATION RULES AND REQUIREMENTS; SHALL COMPLY WITH ALL WORKER'S COMPENSATION AND DISABILITY LAWS; AND SHALL PROVIDE CERTIFICATES OF INSURANCE TO THE ARCHITECT.

15. ALL WORK, MATERIALS, AND EQUIPMENT SHALL BE WARRANTED BY THE CONTRACTOR FOR A MINIMUM PERIOD OF ONE YEAR AFTER THE DATE OF SUBSTANTIAL COMPLETION, OR LONGER BASED ON MANUFACTURER'S WARRANTY OR IF SO REQUIRED BY THE CONTRACT DOCUMENTS.

16. SHOULD THE CONTRACTOR CLAIM EXTRA COST UNDER THIS CONTRACT DUE TO, BUT NOT LIMITED TO, JOB AND FIELD CONDITIONS, EXCESSIVE SHOP DRAWING REVIEW, REVISIONS TO THE DRAWINGS, FIELD INSTRUCTIONS, ETC., THEN THE CONTRACTOR SHALL SUBMIT SUCH ADDITIONAL COSTS, INCLUDING CREDITS AND DETAILED LABOR AND MATERIAL BREAKDOWNS FOR ALL TRADES ASSOCIATED WITH SUCH COSTS, FOR REVIEW BY THE ARCHITECT AND OWNER. IN NO CASE SHALL THE WORK ASSOCIATED WITH SUCH EXTRA COSTS BE PERFORMED BEFORE WRITTEN APPROVAL FROM THE OWNER IS PROVIDED. NO CLAIMS FOR EXTRA WORK SHALL BE REVIEWED UNLESS SO SUBMITTED. NO SUCH CLAIMS SHALL BE VALID IF NOT APPROVED BY THE OWNER AND/OR ARCHITECT. THE OWNER SHALL NOT BE RESPONSIBLE FOR ASSUMPTIONS MADE BY THE CONTRACTOR.

17. IT SHALL BE THE RESPONSIBILITY OF THE CONTRACTOR TO DISTRIBUTE ADEQUATE COPIES OF THE CONTRACT DOCUMENTS TO ALL APPLICABLE TRADES AT ALL TIMES DURING THE PROGRESS OF THE JOB, INCLUDING REVISIONS, SKETCHES, CLARIFICATIONS, ETC. THERE SHALL BE ONE COMPLETE AND UP TO DATE SET OF ALL DOCUMENTS AT THE JOB SITE AT ALL TIMES TO EXPEDITE THE RESOLUTION OF QUESTIONS, COMMENTS, ETC.

B. SCHEDULES

1. THE CONTRACTOR SHALL PROVIDE A PROJECT SCHEDULE, INCORPORATING BUT NOT LIMITED TO LEAD TIMES FOR ALL ELEMENTS OF THE WORK, BEFORE THE COMMENCEMENT OF CONSTRUCTION. AND THE CONTRACTOR SHALL PROVIDE SCHEDULE UPDATES ON A REGULAR BASIS, AT INTERVALS MUTUALLY AGREED BY THE OWNER, ARCHITECT AND THE CONTRACTOR.

2. THE CONTRACTOR SHALL PROVIDE A SUBMITTAL SCHEDULE, INCLUDING PROJECTED DATES FOR ALL REQUIRED SUBMISSIONS, PRIOR TO THE COMMENCEMENT OF CONSTRUCTION. AND THE CONTRACTOR SHALL MAINTAIN A SUBMITTAL RECORD LOG, INCLUDING ACTUAL DATES OF SUBMITTALS MADE, RETURN TO THE CONTRACTOR, AND RE-SUBMITTAL AS APPROPRIATE.

C. WORK

1. THE CONTRACTOR IS SOLELY RESPONSIBLE FOR ALL MEANS, METHODS, TECHNIQUES, AND PROCEDURES OF CONSTRUCTION. THE ARCHITECT SHALL HAVE NO RESPONSIBILITY FOR, NOR SHALL HAVE ANY CONTROL OF, SAME MEANS, METHODS, TECHNIQUES, AND PROCEDURES OF CONSTRUCTION.

2. THE CONTRACTOR IS SOLELY RESPONSIBLE FOR THE CONDITIONS OF THE WORK SITE, INCLUDING SAFETY OF PERSONS AND PROPERTY.

3. THE CONTRACTOR SHALL PROVIDE A CLEAN AND SAFE ENVIRONMENT AT ALL TIMES. THE PRESENCE OF THE ARCHITECT OR THE ARCHITECT'S CONSULTANTS ON THE PROJECT SITE DOES NOT CONSTITUTE ANY RESPONSIBILITY FOR WORK SITE SAFETY OR ENDORSEMENT OF THE CONTRACTOR'S MEANS AND METHODS OF CONSTRUCTION.

4. THE CONTRACTOR SHALL KEEP THE WORK AREA SECURED WHEN UNATTENDED THROUGHOUT THE DURATION OF THE WORK. THE CONTRACTOR SHALL PROVIDE ANY REQUIRED TEMPORARY PARTITIONS, ENCLOSURES, GATES AND PROTECTIONS AS REQUIRED TO SECURE AND PROTECT THE WORK AREA THROUGHOUT THE DURATION OF THE WORK.

5. THE CONTRACTOR MAY BE REQUIRED TO PROVIDE IN-PLACE SAMPLES. IN-PLACE SAMPLES ARE EARLY CONSTRUCTED EXAMPLES OF THE ACTUAL COMPLETED WORK WHICH ACCURATELY REPRESENT THE FINAL APPEARANCE OF THE WORK TO BE COMPLETED. IN-PLACE SAMPLES ARE NOT 'MOCK-UPS' AND ARE NOT INTENDED TO BE DISPOSABLE, BUT MAY BE REJECTED. IN-PLACE SAMPLES ARE INTENDED TO OBTAIN THE ARCHITECT'S AND THE OWNER'S APPROVAL AND RESOLVE PROBLEMS, IF ANY, PRIOR TO THE COMMENCEMENT OF THE BULK OF THE WORK.

6. THE CONTRACT DOCUMENTS MAY REQUIRE THE CONTRACTOR TO PROVIDE PROFESSIONAL ENGINEERING SERVICES. IN SUCH CASE THE CONTRACTOR'S PROFESSIONAL ENGINEER SHALL BE SOLELY PROFESSIONALLY RESPONSIBLE FOR THE WORK; CALCULATE, ENGINEER, AND DOCUMENT THE WORK; PREPARE, PROFESSIONALLY SEAL, SIGN, AND SUBMIT FOR APPROVAL CALCULATIONS, SHOP FABRICATION DRAWINGS, INSTALLATION DRAWINGS, AND ANY OTHER DOCUMENTS NEEDED TO SHOW COMPLIANCE WITH THE CONTRACT REQUIREMENTS.

7. REMEDIAL WORK, INCLUDING CUTTING AND PATCHING REQUIRED TO CORRECT ERRORS AND/OR NON-CONFORMING WORK, MAY BE REQUIRED. THE CONTRACTOR SHALL SUBMIT FOR REVIEW AND APPROVAL TO THE ARCHITECT ALL PRODUCT DATA PRIOR TO THE COMMENCEMENT OF THE REMEDIAL WORK. REMEDIAL WORK WILL BE EXECUTED AT NO COST TO THE OWNER.

8. FASTENERS MAY NOT BE COMPLETELY DESCRIBED IN THE CONTRACT DOCUMENTS. WHERE NOT COMPLETELY SPECIFIED, SELECT FASTENERS APPROPRIATE FOR EACH CONDITION, LOAD, SUBSTRATE AND EXPOSURE. USE FASTENER MANUFACTURER'S PUBLISHED LOAD TABLES TO DETERMINE FASTENER SIZE AND SPACING. PROVIDE A SAFETY FACTOR OF FOUR OR HIGHER. PROVIDE CORROSION RESISTANCE AT LEAST EQUIVALENT TO ITEMS BEING FASTENED. FOLLOW MANUFACTURER'S RECOMMENDATIONS.

9. DO NOT DEVIATE FROM DIMENSIONS AND MEASUREMENTS IN THE CONTRACT DOCUMENTS. UNLESS INDICATED OTHERWISE IN THE CONTRACT DOCUMENTS, INSTALL WORK PLUMB AND LEVEL WITHIN TOLERANCE:
48 INCHES OR LESS: WITHIN 0.06 INCH
OVER 48 INCHES TO TEN FEET: WITHIN 0.125 INCH
OVER TEN FEET TO 20 FEET: WITHIN 0.18 INCH
OVER 20 FEET: WITHIN 0.25 INCH

10. GRID DIMENSIONS ARE TO CENTER OF STRUCTURE. ALL OTHER DIMENSIONS ARE TO FACE OF STUD, UNLESS OTHERWISE NOTED ("CLEAR"=FINISH-TO-FINISH).

11. CONTINUOUSLY PROTECT FROM ALL DAMAGE AND DETERIORATION FOR THE DURATION OF THE WORK: ALL EXISTING WORK TO REMAIN; ALL INSTALLED WORK; ALL GOODS AND MATERIALS INSTALLED AND/OR FABRICATED; ALL APPLIANCES; ALL PROPERTY; AND ALL OTHER SYSTEMS OF THE PROJECT WHETHER PROVIDED BY THE CONTRACTOR OR NOT. THE CONTRACTOR SHALL, WITHOUT ADDITIONAL COMPENSATION, REPAIR, REPLACE OR REFINISH SUCH REMAINING EXISTING CONDITIONS, NEW WORK, GOODS AND MATERIALS, EQUIPMENT, APPLIANCES, AND ANY OTHER PROPERTY DAMAGED DURING THE COURSE OF DEMOLITION AND/OR CONSTRUCTION OF THIS PROJECT.

12. RESTRICT AND CONTROL WORK OVER INSTALLED ROOFING AND WATERPROOFING. WORK AND TRAFFIC DIRECTLY ON ROOFING AND WATERPROOFING IS PROHIBITED; PROVIDE TEMPORARY WALKWAYS AND PLATFORMS.

13. MISCELLANEOUS METAL FABRICATIONS MAY BE REQUIRED BY THE CONTRACT DOCUMENTS. WHERE REQUIRED, THE CONTRACTOR SHALL PROVIDE PROFESSIONAL ENGINEERING SERVICES.

14. NOT ALL LUMBER BLOCKING IS SHOWN. PROVIDE BLOCKING FOR: EVERY ITEM ATTACHED TO FRAMED PARTITIONS, INCLUDING BUT NOT LIMITED TO: ALL OWNER FURNISHED AND/OR INSTALLED ITEMS; ALL WOODWORK AND MILLWORK; ALL HANDRAILS ATTACHED TO FRAMED PARTITIONS; ALL DOORSTOPS ATTACHED TO FRAMED PARTITIONS; ALL TOILET ACCESSORIES ATTACHED TO FRAMED PARTITIONS; ALL WINDOW SHADES. ATTACH BLOCKING FLUSH WITH FACE OF FRAMING AND TIGHT TO BACK OF WALLBOARD. EXTERIOR LUMBER BLOCKING SHALL BE PRESSURE TREATED.

15. WHERE PROPRIETARY PRODUCTS ARE IDENTIFIED IN THE CONTRACT DOCUMENTS, SUBSTITUTIONS MAY BE CONSIDERED AT THE DISCRETION OF THE ARCHITECT UPON SUBMISSION OF A REQUEST FOR SUBSTITUTION. IN NO CASE SHALL SUBSTITUTIONS BE MADE IN THE WORK WITHOUT THE PRIOR WRITTEN APPROVAL OF THE ARCHITECT.

16. UNLESS OTHERWISE NOTED, ALL EXPOSED SURFACES ARE TO BE FINISHED AND/OR PAINTED.

17. THE CONTRACTOR SHALL SUBMIT TO THE ARCHITECT ALL REQUESTED SHOP DRAWINGS, CUT SHEETS, MANUFACTURER'S DATA AND SAMPLES OF ALL CONSTRUCTION ASSEMBLIES FOR APPROVAL BEFORE BEGINNING WORK. NO WORK IS TO BE PERFORMED WITHOUT THE AFOREMENTIONED APPROVAL. THE ARCHITECT AND/OR OWNER RESERVES THE RIGHT TO WITHHOLD APPROVAL OF ANY SHOP DRAWINGS AND/OR OTHER SUBMITTALS IF SAME IS NOT CONSISTENT WITH THE DESIGN INTENTION IN THE CONTRACT DOCUMENTS.

civil
structural
surveying
architecture
planning

i.e. Architectural, LLC.
809 SE Pine St
Roseburg, OR

ieengineering.com

REGISTERED ARCHITECT
NICK LOVEMARK
ROSEBURG, OR
STATE OF OREGON

Rev.	Date	Dwg	Description

STEWART PARK PAVILION
1700 W. STEWART PARK DR
Roseburg, OR 97471
COVER SHEET

PROJECT NO. A12-02
DRW: MC
CHK: NL
06.29.2020
ISSUE: CD

G010

NicKL Jul 13, 2020 Z:\JOBS-ARCHITECTURAL\A129-City of Roseburg\A129-02 Stewart Park Pavilion Renovation\A129-02 T1 Construction Documents\A129-02 T1.dwg

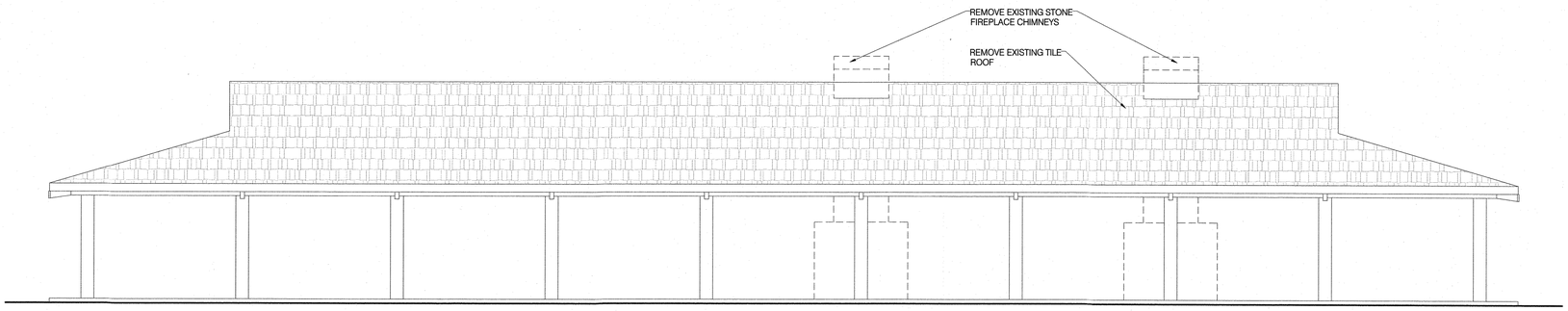

02 DEMO ELEVATION

SCALE: 3/16"=1'-0"

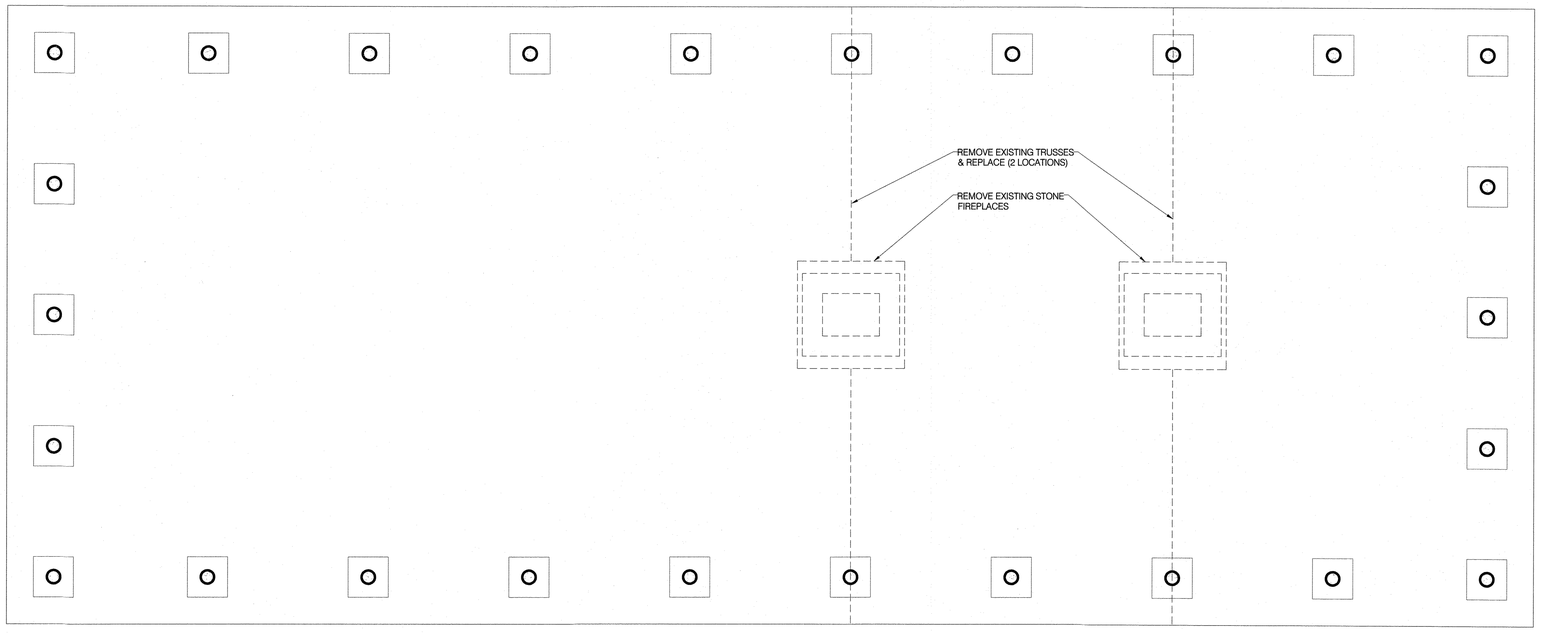

01 DEMO PLAN

SCALE: 3/16"=1'-0"

civil
structural
surveying
architecture
planning

i.e. Architectural, LLC.
809 SE Pine St
Roseburg, OR

ieengineering.com

REGISTERED ARCHITECT
NICK LOVEMARK
ROSEBURG, OR
STATE OF OREGON

Rev.	Date	Dwg	Description

STEWART PARK PAVILION

1700 W STEWART PARK DR
Roseburg, OR 97471

DEMO PLAN

3/16"=1'-0"
06.29.2020
ISSUE: CD

PROJECT NO. A129-02
DRW: MC
CHK: NL

A100

NickL Jul 13, 2020 Z:\JOBS-ARCHITECTURAL\A129-City of Roseburg\A129-02 Stewart Park Pavilion Renovation\A129-02 T1 Construction Documents\A129-02 T1.dwg

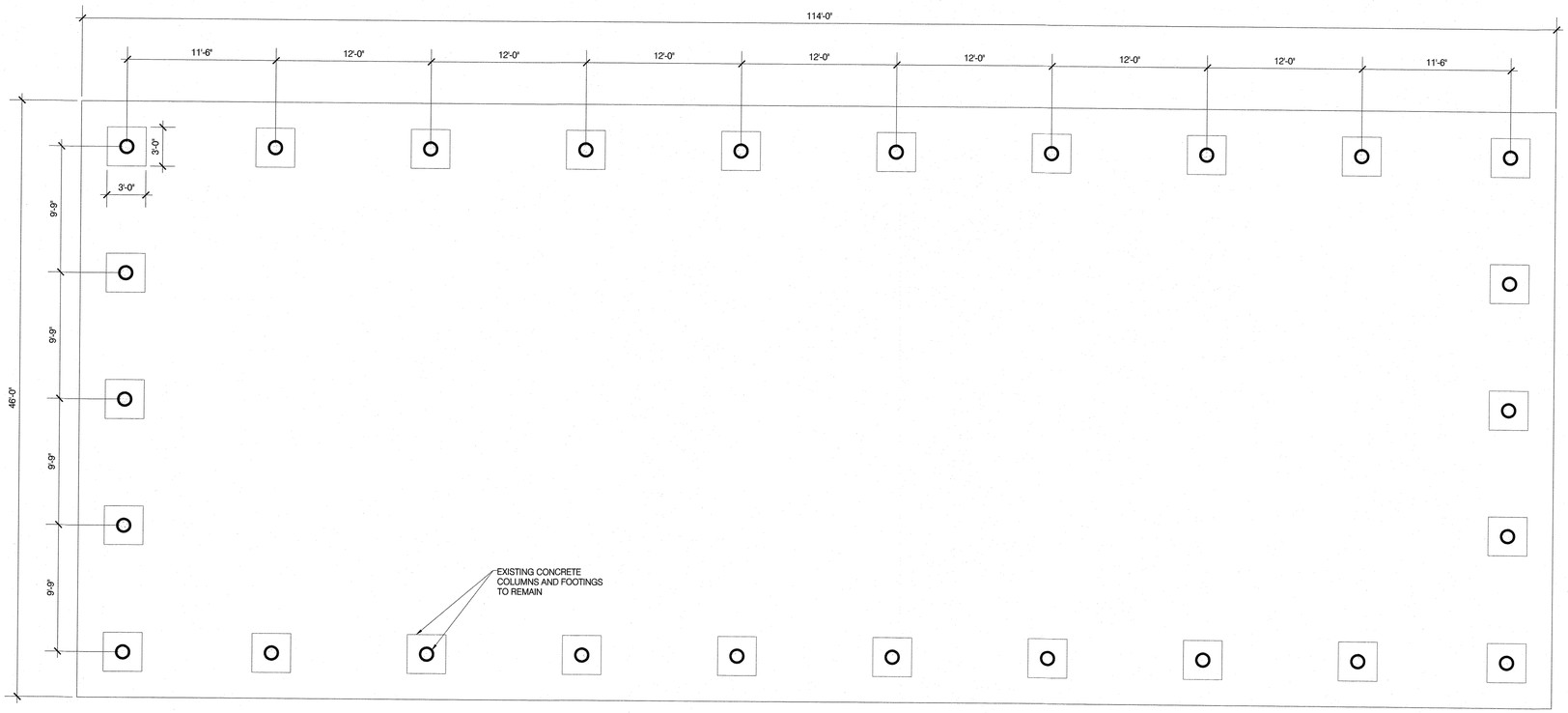

01 FLOOR PLAN
SCALE: 3/16"=1'-0"

civil
structural
surveying
architecture
planning

i.e. Architectural, LLC.
809 SE Pine St
Roseburg, OR

ieengineering.com

REGISTERED ARCHITECT
NICK LOVEMARK
ROSEBURG, OR
STATE OF OREGON

Rev.	Date	Dwg	Description

STEWART PARK PAVILION

1700 W. STEWART PARK DR
Roseburg, OR 97471

FLOOR PLANS
3/16"=1'-0"
06.29.2020
ISSUE: CD

PROJECT NO. A129-02
DRW. MC
CHK. NL

A110

NICKL Jul 13, 2020 Z:\JOBS-ARCHITECTURAL\A129-City of Roseburg\A129-02 Stewart Park Pavilion Renovation\A129-02 T1 Construction Documents\A129-02 T1.dwg

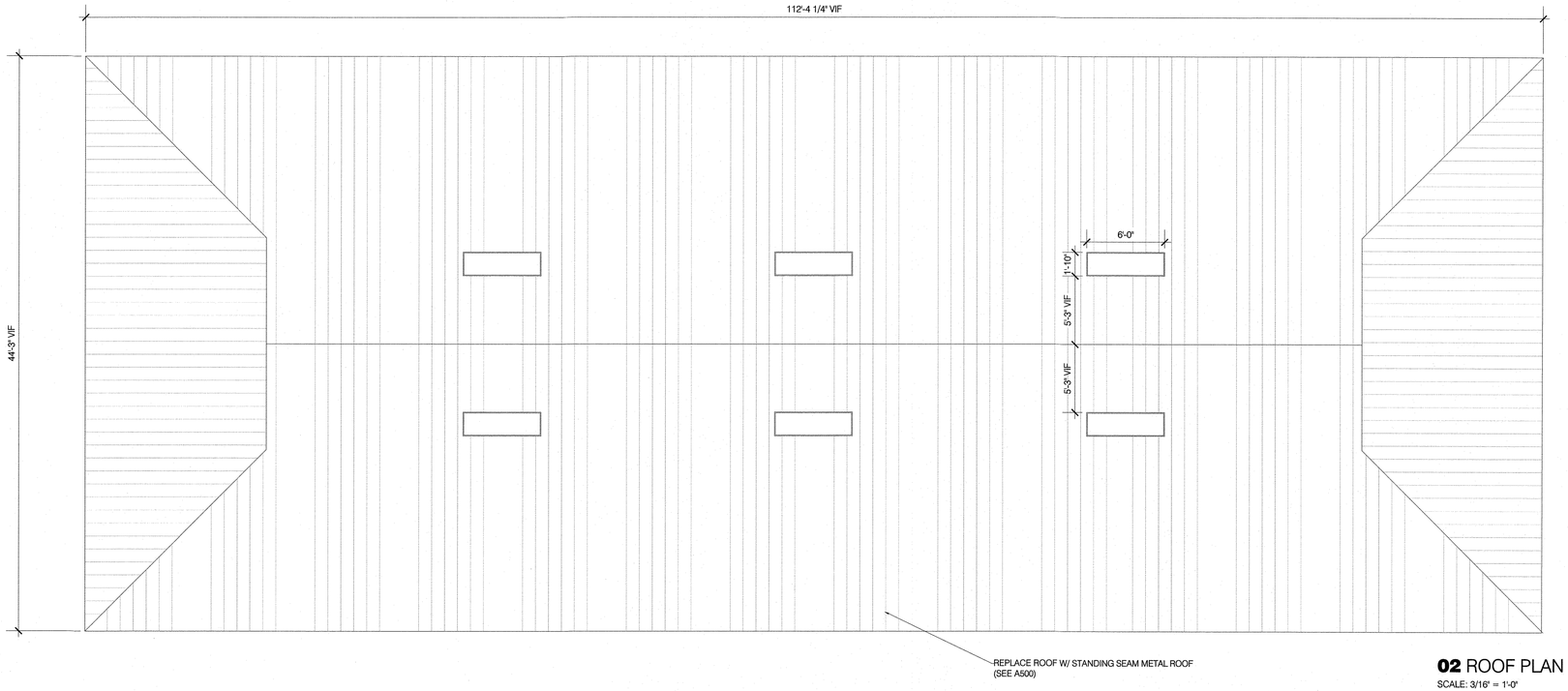

02 ROOF PLAN

SCALE: 3/16" = 1'-0"

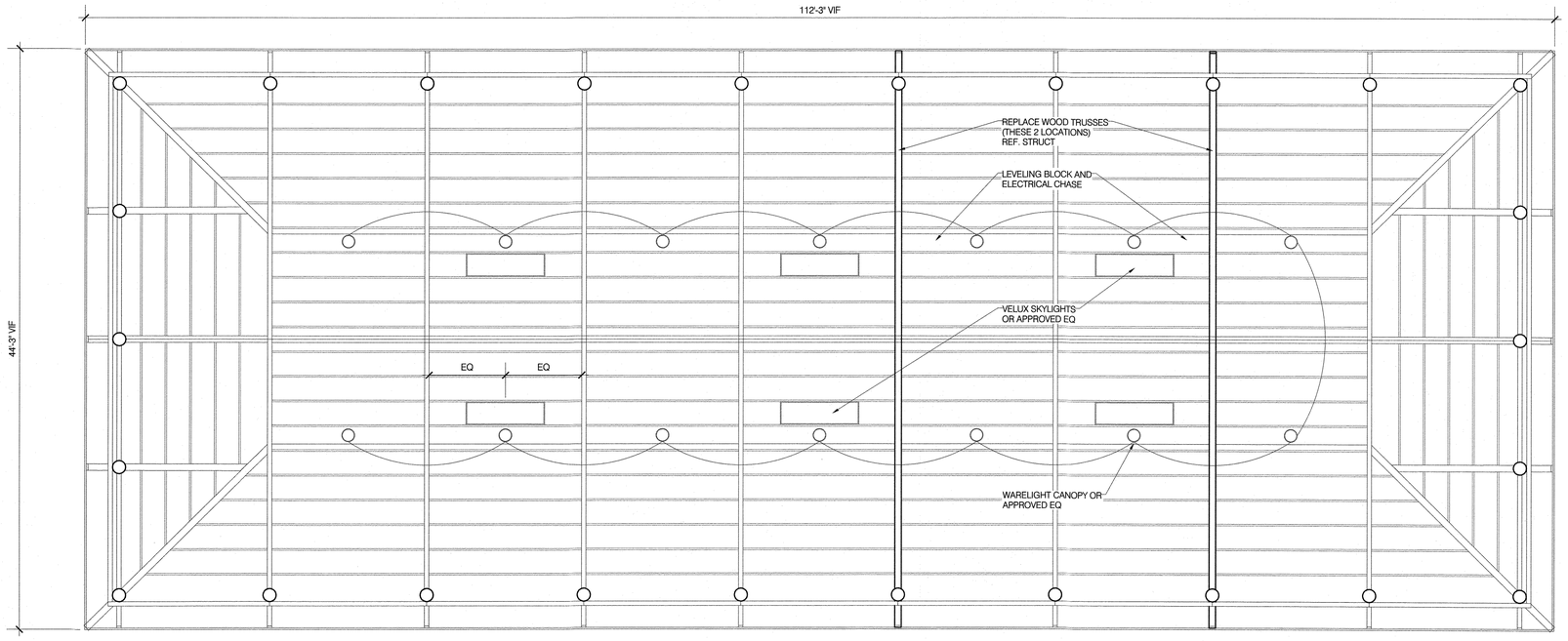

01 REFLECTED CEILING PLAN

SCALE: 3/16"=1'-0"

civil
structural
surveying
architecture
planning

i.e. Architectural, LLC.
809 SE Pine St
Roseburg, OR

ieengineering.com

REGISTERED ARCHITECT
NICK LOVEMARK
ROSEBURG, OR
STATE OF OREGON

Rev.	Date	Dwg	Description

STEWART PARK PAVILION

1700 W STEWART PARK DR,
Roseburg, OR 97471

REFLECTED CEILING PLAN AND ROOF PLAN

3/16" = 1'-0"
06.29.2020
ISSUE: CD

PROJECT NO. A120-02
DRW: MC
CHK: NL

A120

Z:\JOBS-ARCHITECTURE\A120-City of Roseburg\A120-02 Stewart Park Pavilion Renovation\A120-02 T1 Construction Documents\A120-02 T1.dwg

NickL Jul 13, 2020

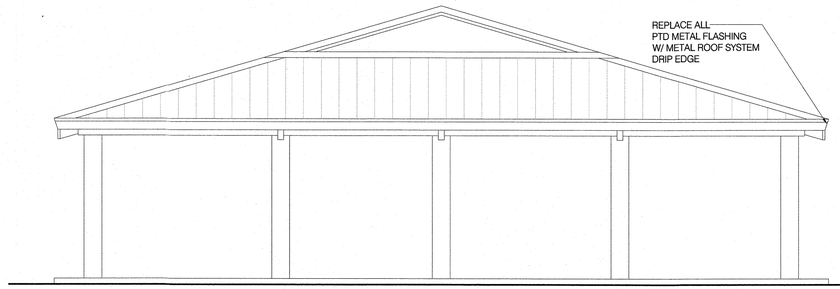

04 EAST/WEST ELEVATIONS

SCALE: 1/4"=1'-0"

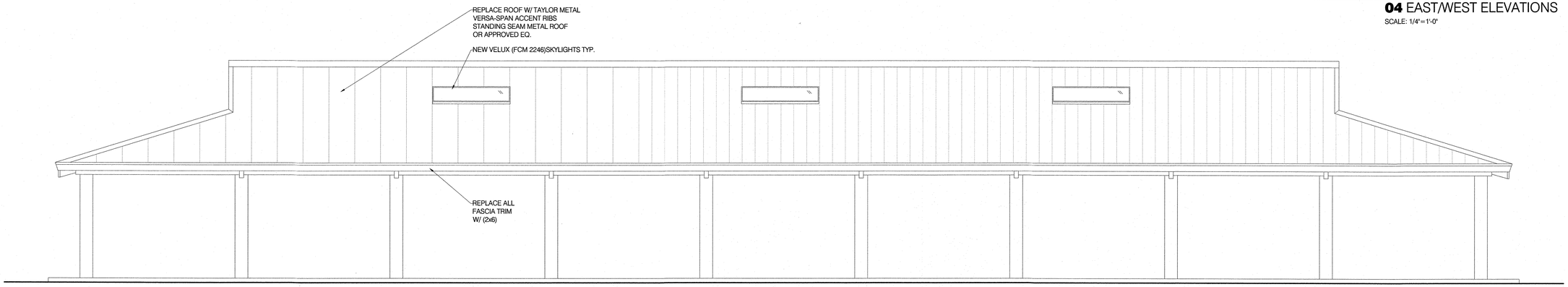

03 NORTH/SOUTH ELEVATIONS

SCALE: 1/4"=1'-0"

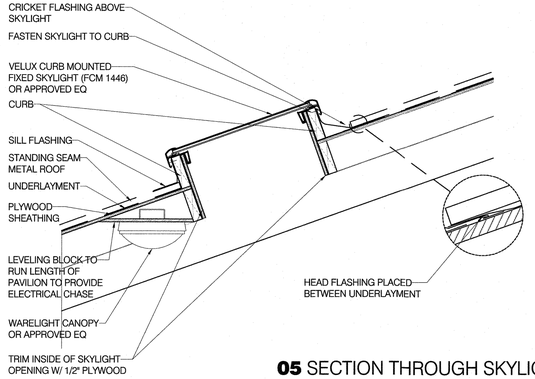

05 SECTION THROUGH SKYLIGHT

SCALE: 1"=1'-0"

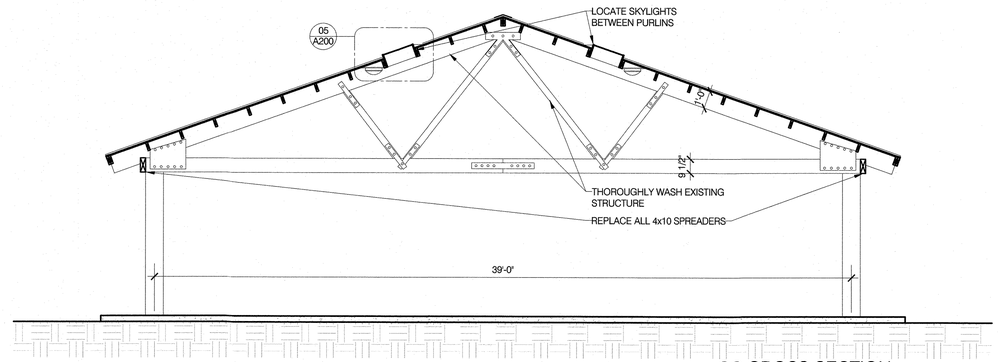

02 CROSS SECTION

SCALE: 1/4"=1'-0"

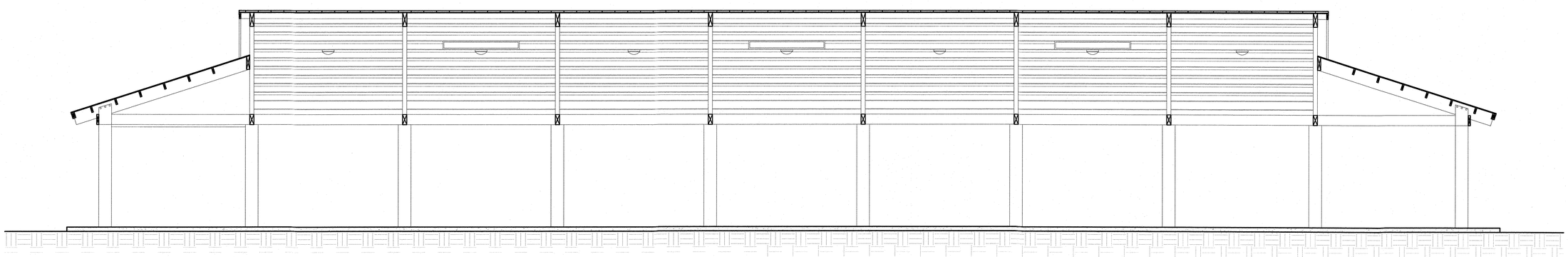

01 LONGITUDINAL SECTION

SCALE: 1/4"=1'-0"

civil
structural
surveying
architecture
planning

i.e. Architectural, LLC.
809 SE Pine St
Roseburg, OR

ieengineering.com

REGISTERED ARCHITECT
NICK LOVEMARK
ROSEBURG, OR
STATE OF OREGON

Rev.	Date	Dwg	Description

STEWART PARK PAVILION

1700 W STEWART PARK DR,
Roseburg, OR 97471

SECTIONS & ELEVATIONS

1/4" = 1'-0"
06.29.2020
ISSUE: CD

PROJECT NO. A129-02
DRW: MC
CHK: NL

A200

NickL Jul 13, 2020 Z:\JOBS-ARCHITECTURAL\A129-02 City of Roseburg\A129-02 Stewart Park Pavilion Renovation\A129-02 T1 Construction Documents\A129-02 T1.dwg

WARELIGHT

PROJECT NAME: _____ CATALOG NUMBER: _____
NOTES: _____ FIXTURE SCHEDULE: _____

CANOPY

DIMENSION

Wattage	Diameter	Height
40	11.42"	4.49"
60	11.42"	4.49"

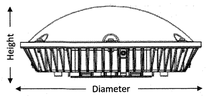

PRODUCT DESCRIPTION

WareLight's Canopy uses an Aluminum + Fresnel PC lens which provides an excellent heat dissipation and excellent lighting effect. The efficiency is up to 130-135lm/w. Lifespans is 100,000hours at 77°F ambient temperature and it is suitable for wet location applications.

At WareLight.com, we offer customers LED canopy lights in various wattages, strengths and color temperatures. Not only are they incredibly durable and reliable; the lights also provide optimal energy efficiency, significantly reducing your lighting energy consumption. They will pay for themselves in no time with the money you save on not needing to replace your fixtures as well as lower your power bill. Whether you are looking for cool, white lighting or warm, spread lighting, our selection of lights offers numerous options to fit your application.

FEATURES

- Wattage available: 40W and 60W
- Voltage: AC100-277V
- CCT: 5,000K
- CRI: >80
- Lifespan: 100,000H at 77°F ambient temperature
- Working temperature: -4°F to 104°F
- Driver: 0-10V dimmable LED power supplies
- Manufacturer Warranty: 5 years
- Certifications: UL for wet locations; DLC premium

ACCESSORIES

- Sensor

LED CANOPY					
Brand	Series	Power	CCT Temperature	Sensor (optional)	Color
WL-	RDCP-	40W- 60W-	50K = 5000K	- - Sensor	BRZ = Bronze WH = White

WARELIGHT

WareLight.com
2750 South 163rd Street
New Berlin, WI 53151

Toll Free 888.571.7878
Info@WareLight.com

TAYLOR METAL PRODUCTS

Versa-Span™
STRUCTURAL SNAP-LOCK

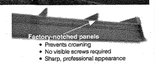

KEY FEATURES

- 12" to 18" coverage options
- 24, 22 gauge Tru-Gauge™ and .032" Aluminum
- Floating clip system: allows for expansion/ contraction of panels in longer lengths
- 1-3/4" vertical rib, factory notching available
- Factory injected Butyl sealant available with testing
- Structural panel that will span up to 4'
- Concealed fasteners: fasteners cannot leak
- Manufactured in Sacramento, CA & Salem, OR
- UL - Code compliance UL Evaluation Report UL ER 25913-01
- UL 580 CLass 90 Wind Uplift rated, UL 790 Class A Fire rated and UL 2218 Class 4 Impact (hail) rated
- UL Construction No. 254, 255, 261, 303, 342, 343, 414, 436, 445, 447, 448, 486, 508, 508A, 543, & 544
- ASTM E-1592-Structural uniform static air pressure ASTM 1646- Water infiltration ASTM 1680- Air infiltration
- Weather tightness warranty available *(Contact TMP representative for details)*
- 2:12 minimum pitch recommended *(For lower pitches, please inquire)*
- Standard panel lengths 2' to 60' *(For longer panels, please inquire)*
- Onsite roll forming available for longer panels
- Panel options: Striations, Accent Ribs, and Flat Pan
- Retro-fit systems available

PANEL PROFILES

12" to 18" coverage options

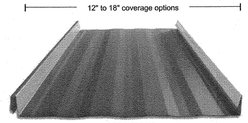

STRIATIONS

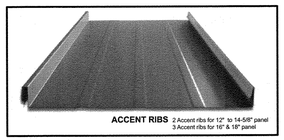

ACCENT RIBS 2 Accent ribs for 12" to 14-5/8" panel
3 Accent ribs for 16" & 18" panel

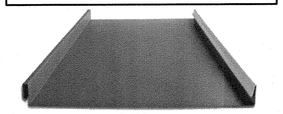

FLAT PAN

SEAM DETAIL

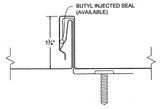

02 STANDARD SUBMITTALS

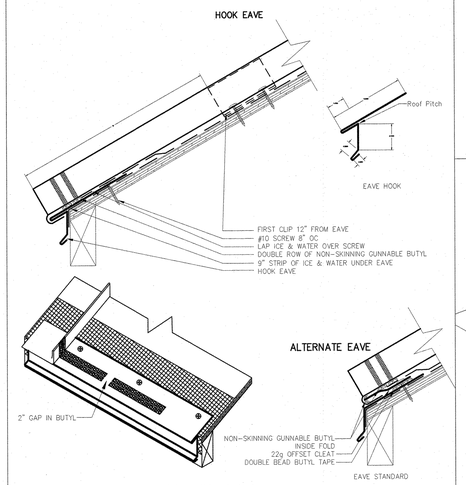

NOTE: All screws must be into solid substrate
Flashing must be lapped 4" with 2 rows of non-skinning gunnable butyl

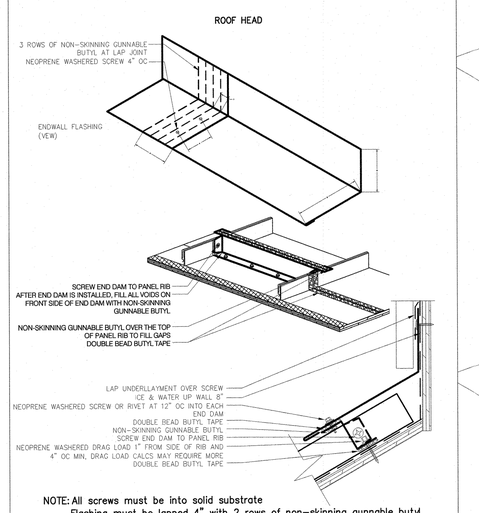

NOTE: All screws must be into solid substrate
Flashing must be lapped 4" with 2 rows of non-skinning gunnable butyl

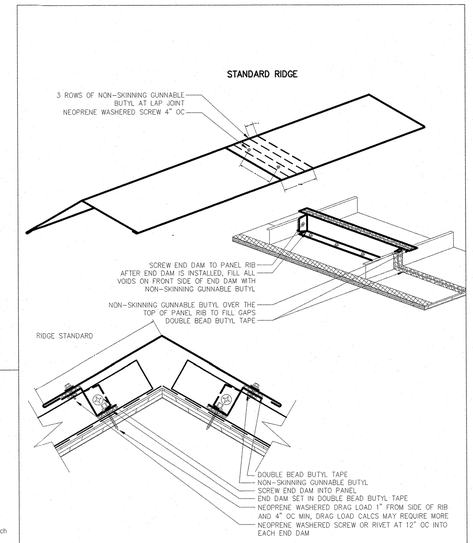

NOTE: All screws must be into solid substrate
Flashing must be lapped 4" with 2 rows of non-skinning gunnable butyl

APPROVED VENDORS:

ROOFING:

TAYLOR METAL-	VERSA-SPAN: (ACCENT RIBS 3 FOR 16" PANEL) 24 GA STANDARD COLOR TBD
AEPspan -	SPANSEAM METAL ROOFING (16" COVERAGE SPAN-LOK hp W/STRIATIONS) 24 GA STANDARD COLOR TBD
ATAS -	2" FIELD-LOK (FLR154) 24 GA STANDARD COLOR TBD

LIGHTING:

WARELIGHT-	LED CANOPY (PART# WL-RDCP-60W-50K BRZ)
LITHONIA -	CNY LED CANOPY (PART# CNY LED P0 40K MVOLT DDB)
NICOR -	VELA OUC - LED CANOPY (PART# OUC1045MV40)

SKYLIGHTS:

VELUX-	FIXED SKYLIGHT CURB MOUNTED (FCM 2246)
FAKRO-	PREMIUM CURB MOUNTED SKYLIGHT FXC (FXC 22 $\frac{3}{4}$"x46 $\frac{1}{2}$")

*ANY ALTERNATES OR DEVIATIONS TO BE APPROVED BY THE ARCHITECT OR OWNER PRIOR TO THE COMMENCEMENT OF THE WORK.

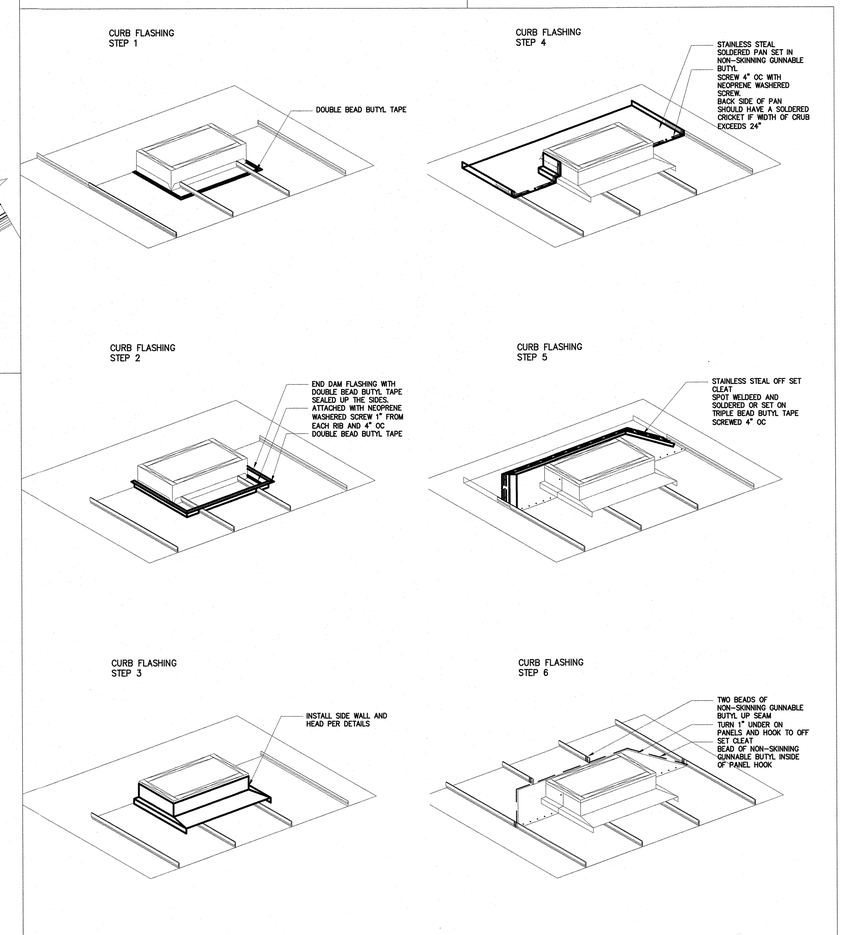

01 TYPICAL METAL ROOF DETAILS
SCALE: NTS

civil
structural
surveying
architecture
planning

i.e. Architectural, LLC.
809 SE Pine St
Roseburg, OR

ieengineering.com

REGISTERED ARCHITECT
NICK LOVEMARK
ROSEBURG, OR
STATE OF OREGON

Rev.	Date	Dwg	Description

STEWART PARK PAVILION
1700 W STEWART PARK DR.
Roseburg, OR 97471

DETAILS
1/4" = 1'-0"
06.29.2020

PROJECT NO. A129-02
DRW: MC
CHK: NL
ISSUE: CD

A500

NickL Jul 13, 2020 Z:\JOBS-ARCHITECTURAL\A129-City of Roseburg\A129-02 Stewart Park Pavilion Renovation\A129-02 T1 Construction Documents\A129-02 T1.dwg

DocuSign Envelope ID: 5005464E-2312-4512-86D5-760CE293B92A

GENERAL STRUCTURAL NOTES

STRUCTURAL DRAWINGS ARE A PORTION OF THE CONTRACT DOCUMENTS AND ARE INTENDED TO BE USED WITH ARCHITECTURAL, MECHANICAL, AND ELECTRICAL DRAWINGS. THE CONTRACTOR IS RESPONSIBLE FOR COORDINATING THE REQUIREMENTS FROM THESE DRAWINGS INTO THEIR SHOP DRAWINGS AND WORK.

THESE GENERAL NOTES SUPPLEMENT THE PROJECT SPECIFICATIONS. REFER TO THE PROJECT SPECIFICATIONS FOR ADDITIONAL REQUIREMENTS. NOTES AND DETAILS ON THE STRUCTURAL DRAWINGS SHALL TAKE PRECEDENCE OVER THE GENERAL NOTES AND TYPICAL DETAILS. WHERE NO DETAILS ARE GIVEN, CONSTRUCTION SHALL BE AS SHOWN FOR SIMILAR WORK.

CODE REQUIREMENTS:
CONFORM TO THE 2019 OREGON STRUCTURAL SPECIALTY CODE (OSSC), BASED ON THE 2018 INTERNATIONAL BUILDING CODE (IBC).

TEMPORARY CONDITIONS:
THE STRUCTURE IS DESIGNED TO FUNCTION AS A UNIT UPON COMPLETION. THE CONTRACTOR IS RESPONSIBLE FOR FURNISHING ALL TEMPORARY BRACING AND/OR SUPPORT THAT MAY BE REQUIRED AS THE RESULT OF THE CONTRACTOR'S CONSTRUCTION METHODS AND/OR SEQUENCES.

CONTRACTOR'S CONSTRUCTION AND/OR ERECTION SEQUENCES SHALL RECOGNIZE AND CONSIDER THE EFFECTS OF THERMAL MOVEMENTS OF STRUCTURAL ELEMENTS DURING THE CONSTRUCTION PERIOD.

RETAINING WALLS WHICH TIE TO UPPER SLABS SHALL NOT BE BACKFILLED UNTIL THE UPPER SLABS REACH FULL STRENGTH UNLESS ADEQUATE BRACING IS PROVIDED AT THE TOP OF THE WALL.

ASSUMED FUTURE CONSTRUCTION:
VERTICAL: NONE
HORIZONTAL: NONE

DESIGN CRITERIA:
DESIGN WAS BASED ON THE STRENGTH AND DEFLECTION CRITERIA OF THE OSSC. IN ADDITION TO THE DEAD LOADS, THE FOLLOWING LOADS AND ALLOWABLES WERE USED FOR DESIGN, WITH LIVE LOADS (L.L.) REDUCED PER OSSC:

SNOW CRITERIA		
DESIGN ROOF SNOW LOAD	25 PSF MINIMUM IN ACCORDANCE WITH OSSC	
SNOW DRIFT	PER OSSC AS SHOWN ON PLANS	
GROUND SNOW LOAD	Pg= 10 PSF IN ACCORDANCE WITH 2007 SNOW LOAD ANALYSIS FOR OREGON	
FLAT ROOF SNOW LOAD	Pf = 11 PSF	
SNOW EXPOSURE FACTOR	Ce = 1.0	
SNOW LOAD IMPORTANCE FACTOR	Is = 1.1	
THERMAL FACTOR	Ct = 1.0	
WIND CRITERIA		
BASIC WIND SPEED		
MAIN WIND FORCE RESISTING SYSTEM	95 MPH PER ASCE 7-16	
COMPONENTS AND CLADDINGS	95 MPH (3-SECOND GUST) PER ASCE 7-16	
EXPOSURE	B	
GUST/INTERNAL PRESSURE	GCpi = +/- 0.18	
SEISMIC CRITERIA		
RISK CATEGORY	II	
SEISMIC DESIGN CATEGORY	D	
SITE CLASS	D	
IMPORTANCE FACTOR	I_E = 1.0	
MCE SPECTRAL ACCELERATION	S_S = 0.834	S_1 = 0.445
SITE COEFFICIENT	F_a = 1.166	F_v = 1.555
DESIGN SPECTRAL ACCELERATION	S_{DS} = 0.644	S_{D1} = 0.461

CONCRETE ACCESSORIES:
HEADED SHEAR STUDS SHALL BE NELSON HEADED ANCHORS WITH FLUXED ENDS OR APPROVED. DEFORMED BAR ANCHORS (D.B.A.) SHALL BE NELSON, TYPE D2L, OR APPROVED. STUDS AND D.B.A. SHALL BE AUTOMATICALLY END-WELDED WITH THE MANUFACTURER'S STANDARD EQUIPMENT IN ACCORDANCE WITH THEIR RECOMMENDATIONS.

EXPANSION BOLTS SHALL BE HILTI KWIK BOLT TZ, SIMPSON STRONG-BOLT, OR APPROVED WITH EQUAL ICC ALLOWABLE TENSION AND SHEAR VALUES. EXPANSION BOLTS SHALL BE INSTALLED IN STRICT CONFORMANCE WITH MANUFACTURER'S RECOMMENDATIONS. DO NOT CUT REINFORCING IN NEW OR EXISTING CONCRETE DURING INSTALLATION.

EPOXY ADHESIVE SHALL BE HILTI HIT-RE 500-SD OR APPROVED WITH EQUAL ICC ALLOWABLE TENSION AND SHEAR VALUES. EPOXY ADHESIVE SHALL BE INSTALLED IN STRICT CONFORMANCE WITH MANUFACTURER'S RECOMMENDATIONS. DO NOT CUT REINFORCING IN NEW OR EXISTING CONCRETE DURING INSTALLATION.

PERMANENTLY EXPOSED EMBEDDED PLATES AND ANGLES SHALL BE HOT-DIPPED, GALVANIZED AFTER FABRICATION, UNLESS OTHERWISE NOTED. NO LOADS OR WELDS SHALL BE PLACED ON EMBEDDED PLATES OR ANGLES FOR A MINIMUM OF 7 DAYS AFTER CASTING.

WOOD STRUCTURAL PANELS:
WOOD STRUCTURAL PANELS SHALL CONFORM TO THE REQUIREMENTS OF "U.S. PRODUCT STANDARD PS 1 FOR CONSTRUCTION AND INDUSTRIAL PLYWOOD", "U.S. PRODUCT STANDARD PS 2 PERFORMANCE STANDARD FOR WOOD-BASED STRUCTURAL-USE PANELS", OR "APA PRP-108 PERFORMANCE STANDARDS". UNLESS NOTED, PANELS SHALL BE APA RATED SHEATHING, EXPOSURE 1, OF THE THICKNESS AND SPAN RATING SHOWN ON THE DRAWINGS.

WOOD STRUCTURAL PANEL INSTALLATION SHALL BE IN CONFORMANCE WITH APA RECOMMENDATIONS. ALLOW 1/8" SPACING AT PANEL ENDS AND EDGES, UNLESS OTHERWISE RECOMMENDED BY THE PANEL MANUFACTURER.

ALL ROOF SHEATHING AND SUB-FLOORING SHALL BE INSTALLED WITH FACE GRAIN PERPENDICULAR TO SUPPORTS, EXCEPT AS INDICATED ON THE DRAWINGS. ROOF SHEATHING SHALL EITHER BE BLOCKED, TONGUE-AND-GROOVE, OR HAVE EDGES SUPPORTED BY PLYCLIPS. WHEN ROOF SHEATHING IS NAILED DIRECTLY TO BLOCKING. THE BLOCKING SHALL BE NAILED TO SUPPORT MEMBERS WITH A MINIMUM OF 16d NAILS AT 4" O.C. SUB-FLOORING SHEATHING SHALL BE UNBLOCKED, EXCEPT AS INDICATED ON DRAWINGS. SUB-FLOOR PANELS SHALL BE FIELD GLUED TO THE FRAMING USING ADHESIVES MEETING APA SPECIFICATION AFG-01 OR ASTM D3498. TONGUE AND GROOVE PANELS SHALL ALSO BE GLUED AT THE T&G JOINT. SHEAR WALL SHEATHING SHALL BE INSTALLED EITHER HORIZONTALLY OR VERTICALLY AND BE BLOCKED WITH 2x FRAMING AT ALL PANEL EDGES. NAILING NOT SHOWN SHALL BE AS INDICATED ON OSSC TABLE 2304.9.1. ALL NAILS SHALL BE COMMON NAILS EXCEPT USE RING SHANK FOR ROOF SHEATHING.

SAWN LUMBER:
SAWN LUMBER SHALL CONFORM TO WEST COAST LUMBER INSPECTION BUREAU OR WESTERN WOOD PRODUCTS ASSOCIATION GRADING RULES. LUMBER SHALL BE KILN DRIED AND BE THE SPECIES AND GRADE NOTED BELOW:

USE	SPECIES/GRADE	Fb (PSI)
DIM. LIMBER 2" TO 4" THICK	DOUGLAS FIR-LARCH NO. 2	900
BEAMS 6" x 10" AND GREATER	DOUGLAS FIR-LARCH NO.1	1350
POSTS 5" x 5" AND GREATER	DOUGLAS FIR-LARCH NO. 1	1200

ALL LUMBER IN CONTACT WITH CONCRETE OR CMU SHALL BE PRESSURE TREATED, UNLESS AN APPROVED MOISTURE BARRIER IS PROVIDED. FRAMING ACCESSORIES AND STRUCTURAL FASTENERS SHALL BE MANUFACTURED BY SIMPSON STRONG TIE (OR APPROVED EQUAL) AND OF THE SIZE AND TYPE SHOWN ON THE DRAWINGS. ALL NAIL HOLES SHALL BE FILLED WITH STRUCTURAL FASTENERS, UNLESS NOTED OTHERWISE ON THE DRAWINGS AND FASTENERS SHALL BE INSTALLED FOLLOWING ALL MANUFACTURERS REQUIREMENTS. IF A SUBSTITUTION IS MADE, A DOCUMENT SHALL BE SUBMITTED TO THE ARCHITECT FOR APPROVAL OUTLINING THE FRAMING ACCESSORIES BEING REPLACED AND THE SUBSTITUTED FRAMING ACCESSORIES. ALLOWABLE LOADS FOR THE SIMPSON ACCESSORIES SHALL BE TABULATED ALONG WITH ALLOWABLE LOADS FOR THE SUBSTITUTED ACCESSORIES, WHICH CLEARLY INDICATE THE SUBSTITUTED ACCESSORIES HAVING AN EQUAL OR GREATER CAPACITY. HANGERS NOT SHOWN SHALL BE SIMPSON U-TYPE OR B-TYPE OF SIZE RECOMMENDED FOR THE MEMBER.

ALL FRAMING NAILS SHALL BE OF THE SIZE AND NUMBER INDICATED ON THE DRAWINGS AND CONFORM TO ASTM F 1667, "STANDARD SPECIFICATION OF DRIVEN FASTENERS: NAILS, SPIKES, AND STAPLES AND NER-272 "POWER-DRIVEN STAPLES AND NAILS FOR USE IN ALL TYPES OF BUILDING CONSTRUCTION." NAILS SHALL BE IDENTIFIED BY LABELS (ATTACHED TO THEIR CONTAINERS) THAT SHOW THE MANUFACTURER'S NAME AND NES REPORT NUMBER, NAIL SHANK DIAMETER, AND LENGTH AND SHALL BE SUBMITTED TO THE ARCHITECT PRIOR TO FRAMING. NAILING NOT SHOWN SHALL BE AS INDICATED ON OSSC TABLE 2304.9.1 OR NER-272. THE FOLLOWING NAIL SIZES SHALL BE USED:

NAIL TYPE	SHANK DIAMETER (IN.)	MINIMUM PENETRATION INTO FRAMING MEMBER (IN.)
6d	0.113	1.25
8d	0.131	1.5
10d	0.148	1.625
12d	0.148	1.625
16d	0.148	1.625

BOLTS AND LAG SCREWS SHALL CONFORM TO ANSI/ASME STANDARD B18.2.1-1981. ALL BOLTS AND LAG SCREWS SHALL BE INSTALLED WITH STANDARD CUT WASHERS. ALL A307 BOLTS SHALL HAVE CUT THREADS.

CUTTING AND NOTCHING OF JOISTS AND STUDS SHALL CONFORM TO OSSC SECTIONS 2308.8.2, 2308.9.10 AND 2308.10.4.2.

SALVAGED LUMBER SHALL BE GRADED BY AN APPROVED GRADING AGENCY PRIOR TO USE AND SHALL MEET THE MINIMUM BENDING STRESSES SHOWN ABOVE.

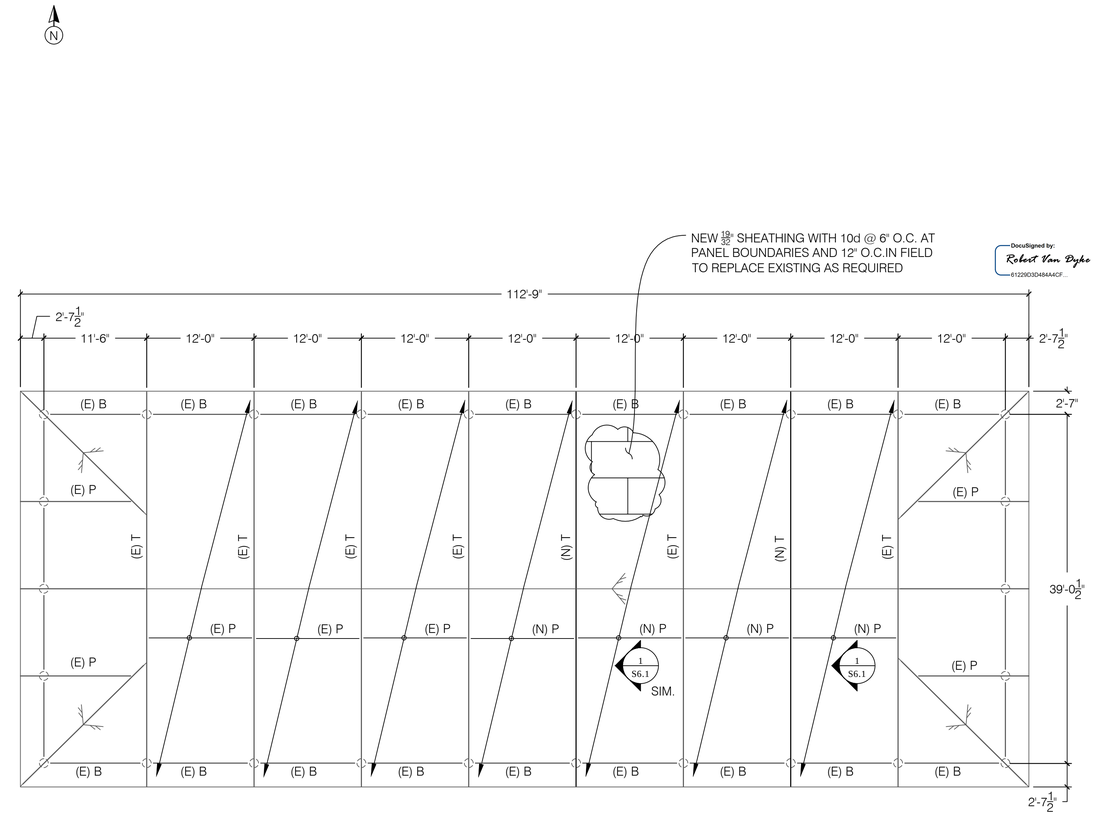

NOTE:

1) INDICATES EXISTING 12" CONCRETE COLUMN BELOW.

2) (E) P — INDICATES EXISTING 2x4 ROOF PURLINS.

3) (N) P — INDICATES NEW 2x4 ROOF PURLINS AT 24" O.C., AS REQUIRED TO REPLACE EXISTING.

4) (E) T — INDICATES EXISTING TRUSS.

5) (N) T — INDICATES NEW TRUSS.

6) (E) B — INDICATES EXISTING BEAM.

7) INDICATES EXISTING ROOF RIDGE OR HIP.

8) INDICATES EXISTING ROOF VALLEY.

9) FIELD VERIFY ALL EXISTING DIMENSIONS SHOW, PRIOR TO TRUSS FABRICATION.

1 ROOF PLAN
SCALE: 1/8" = 1'- 0"

DocuSigned by: Robert Van Dyke
6122F6D3D48A4ACF...

civil
structural
surveying
architecture
planning

i.e. Structural L.L.C.
6975 SW Sandburg St.
Suite 160
Tigard, OR
ieengineering.com

STRUCTURAL REGISTERED PROFESSIONAL ENGINEER 73626 OREGON
DIGITAL SIGNATURE
DECEMBER 21, 2017
ROBERT W. VAN DYKE
EXPIRES: 6/30/2022

Rev.	Date	Dwg	Description

STEWART PARK PAVILION

1700 W STEWART PARK DR.
ROSEBURG OR 97471

ROOF PLAN

06.29.2020
ISSUE: CD

PROJECT NO. S237-11
DRW: DAS
CHK: RWV

S2.1

C:\Users\Leo\Desktop\Dima's Documents\JOBS\NON-TERRAFIRMA\S237-11 STEWART PARK PAVILION\S237-11 STEWART PARK PAVILION | 7/13/2020 3:08 PM BY Dima

DocuSign Envelope ID: 5005464E-2312-4512-86D5-760CE293B92A

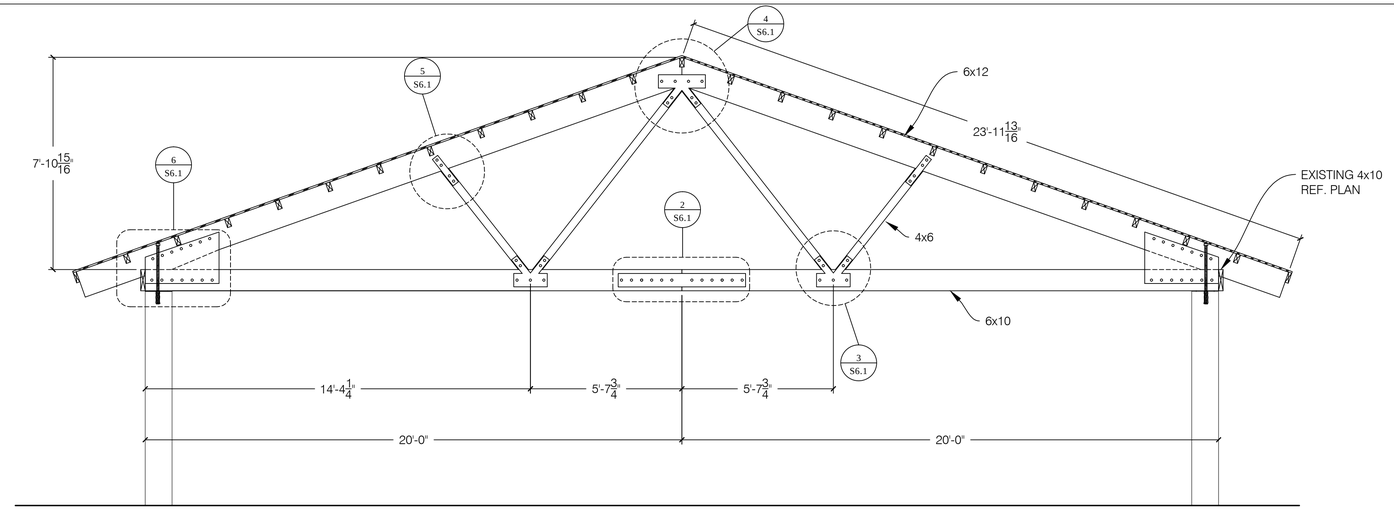

1 NEW TRUSS DETAIL

SCALE: 3/8" = 1'-0"

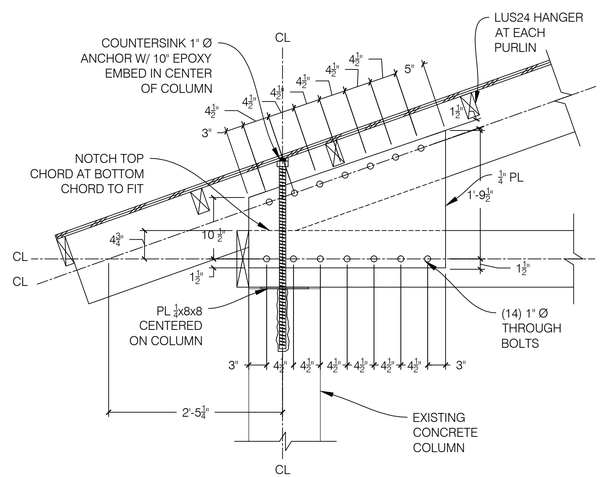

6 SADDLE CONNECTION AT TRUSS CHORDS

SCALE: 1" = 1'-0"

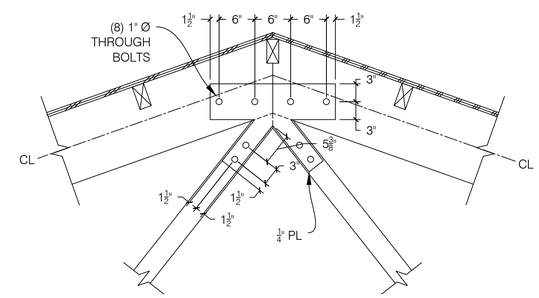

4 CONNECTION AT RIDGE

SCALE: 1" = 1'-0"

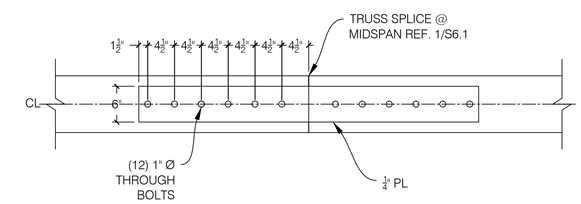

2 CONNECTION AT TRUSS SPLICE

SCALE: 1" = 1'-0"

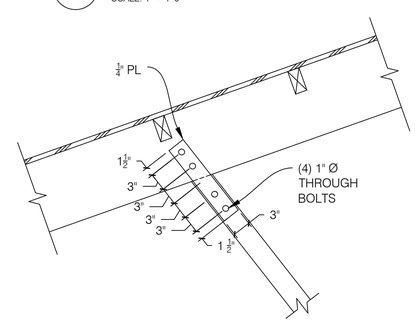

5 CONNECTION AT TRUSS WEB TO TOP CHORD

SCALE: 1" = 1'-0"

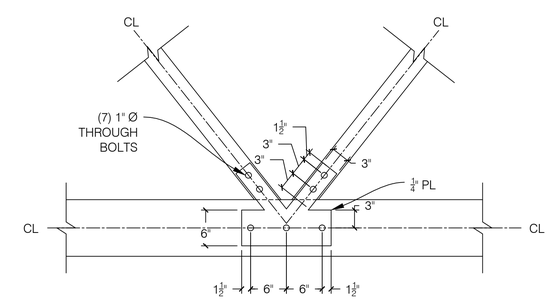

3 CONNECTION AT TRUSS WEBS AND BOTTOM CHORD

SCALE: 1" = 1'-0"

i.e.
civil
structural
surveying
architecture
planning

i.e. Structural L.L.C.
6975 SW Sandburg St.
Suite 160
Tigard, OR
ieengineering.com

STRUCTURAL REGISTERED PROFESSIONAL ENGINEER 73626 OREGON
DIGITAL SIGNATURE
DECEMBER 21, 2017
ROBERT W. VAN DYKE

EXPIRES: 6/30/2022

Rev.	Date	Dwg	Description

STEWART PARK PAVILION

1700 N STEWART PARK DR.
ROSEBURG OR 97471

DETAILS

PROJECT NO. S237-11
DRW. DAS
CHK. RWV

06.29.2020
ISSUE: CD

S6.1

C:\Users\Leo\Desktop\Dima's Documents\JOBS\NON-TERRAFIRMA\S237-11 STEWART PARK PAVILION\S237-11 STEWART PARK PAVILION | 7/13/2020 3:08 PM BY Dima